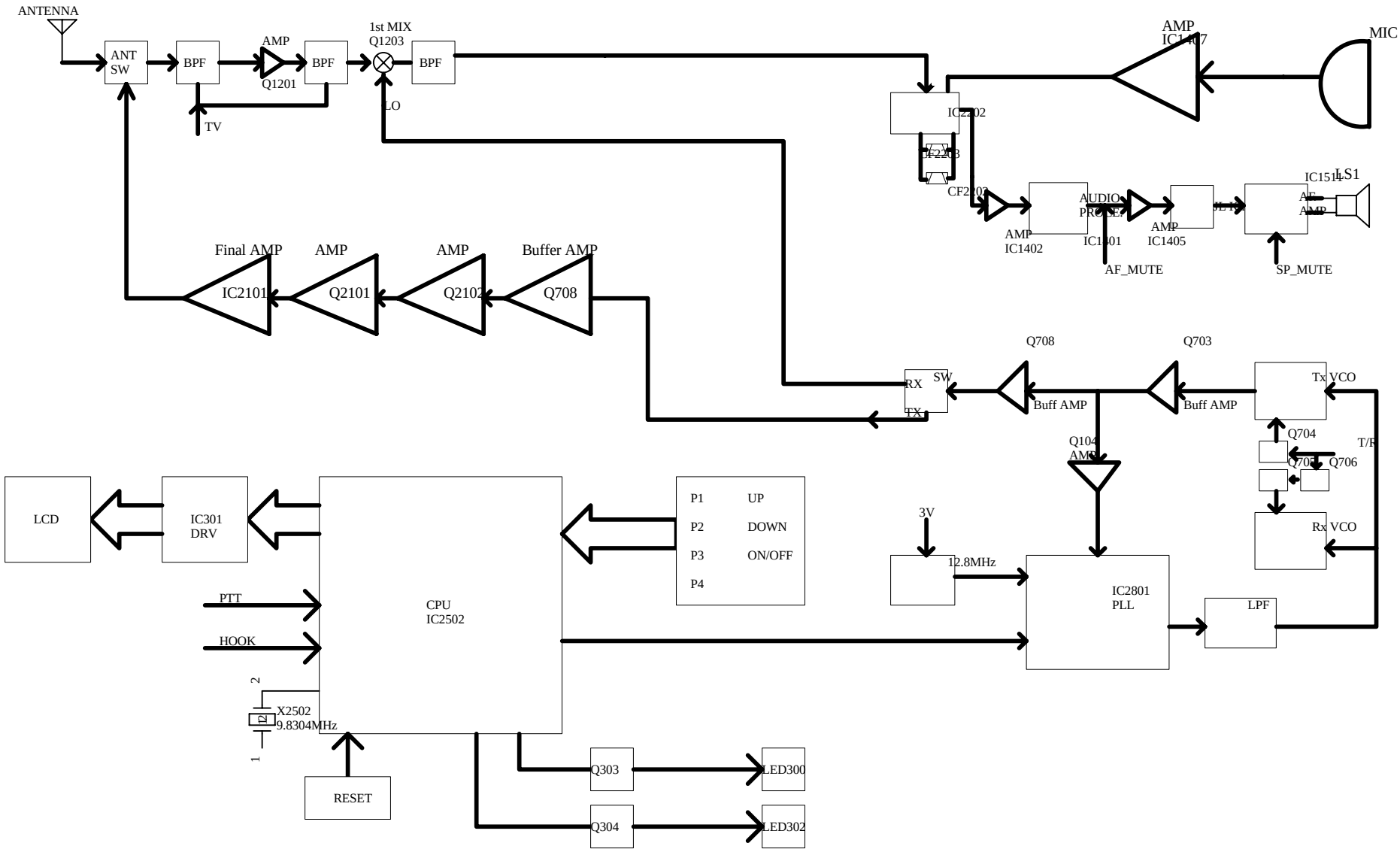

Title	Quantun Electronic LLC.	
Size A4	Number QM-790-U1 Block Diagram	Revision V1.0
Date: 17-Aug-2010	Sheet of	
File: D:\nanmei\QM790\sch\790_RF_100519.DDB	Drawn By:	