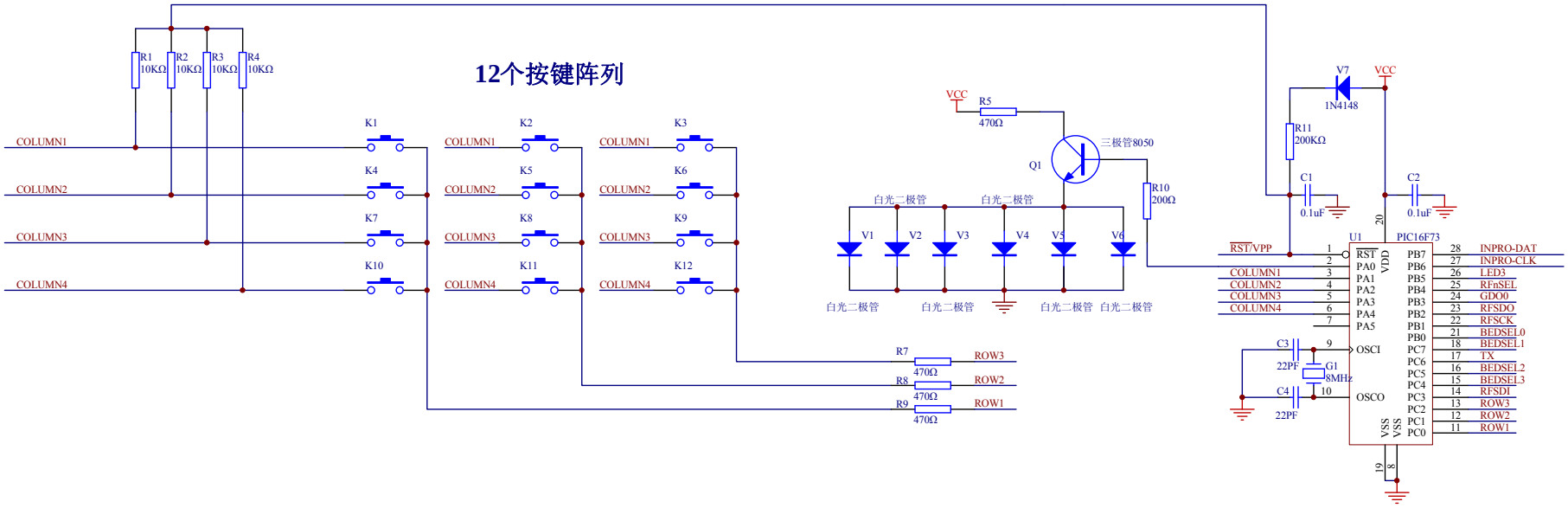

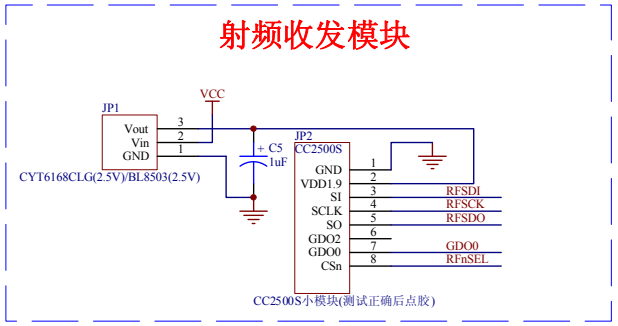

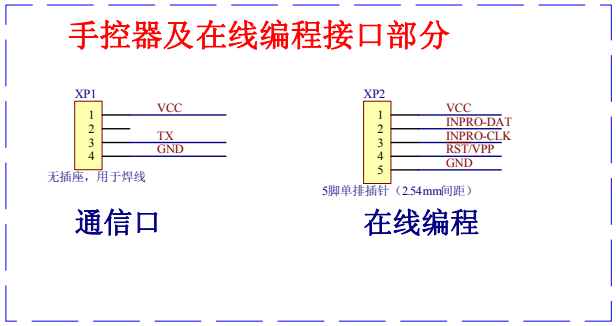

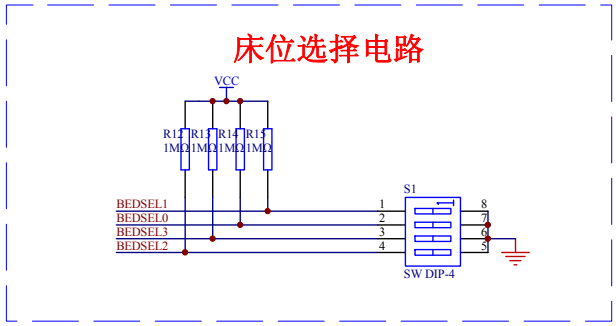

Title		
Size A3	Number	Revision
Date: 24-Jun-2009	Sheet of	
File: E:\礼恩派\按摩床\电路图\BedDesign\BedDesign.Sch	Drawn By:	