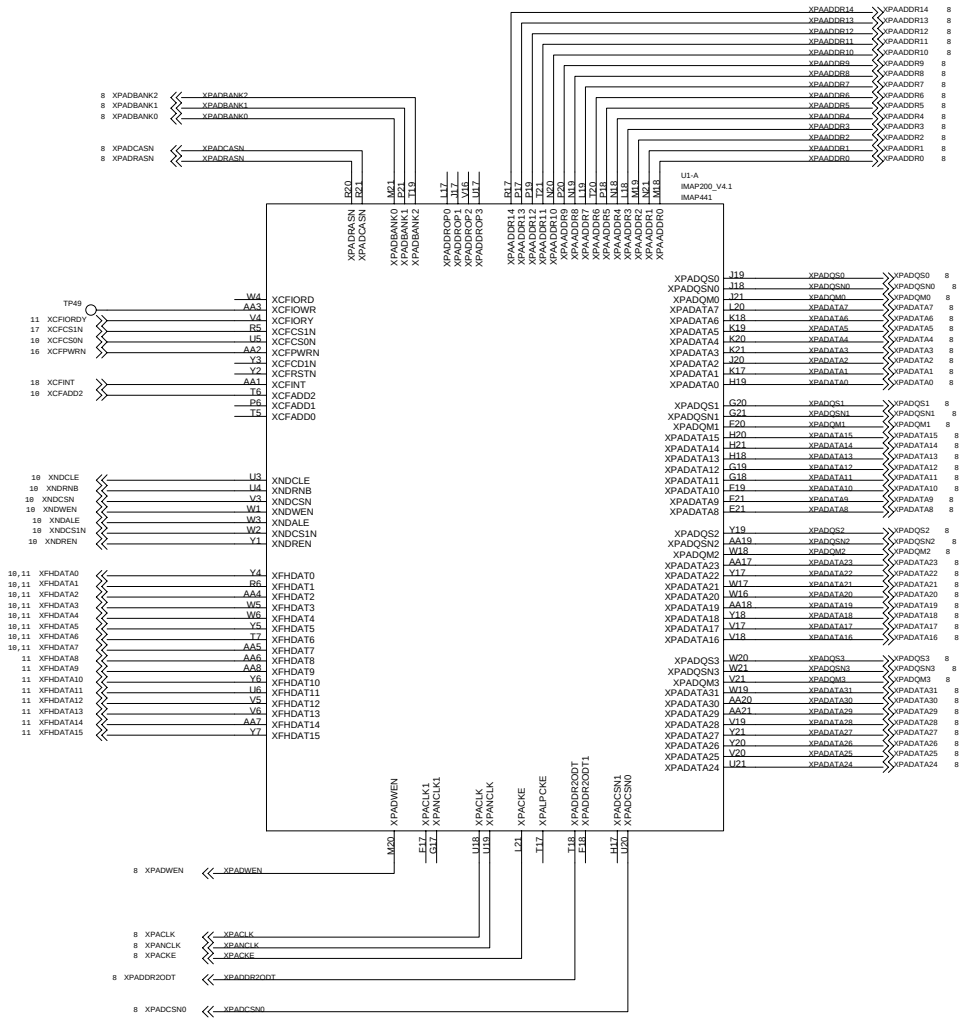
U1-A
IMAP200_V4.1
IMAP441
XPADRASN P20
XPADCASN P21
XPADBANK0 M21
XPADBANK1 P21
XPADBANK2 T19
XPADDROP0 L17
XPADDROP1 U17
XPADDROP2 V6
XPADDROP3 U17
XPAADDR14 R17
XPAADDR13 P17
XPAADDR12 P19
XPAADDR11 T21
XPAADDR10 N20
XPAADDR9 P20
XPAADDR8 N19
XPAADDR7 T19
XPAADDR6 T20
XPAADDR5 P18
XPAADDR4 N18
XPAADDR3 L18
XPAADDR2 L19
XPAADDR1 M21
XPAADDR0 M18
8 XPADBANK2 XPADBANK2
8 XPADBANK1 XPADBANK1
8 XPADBANK0 XPADBANK0
8 XPADCASN XPADCASN
8 XPADRASN XPADRASN
XPAADDR14 XPAADDR14 8
XPAADDR13 XPAADDR13 8
XPAADDR12 XPAADDR12 8
XPAADDR11 XPAADDR11 8
XPAADDR10 XPAADDR10 8
XPAADDR9 XPAADDR9 8
XPAADDR8 XPAADDR8 8
XPAADDR7 XPAADDR7 8
XPAADDR6 XPAADDR6 8
XPAADDR5 XPAADDR5 8
XPAADDR4 XPAADDR4 8
XPAADDR3 XPAADDR3 8
XPAADDR2 XPAADDR2 8
XPAADDR1 XPAADDR1 8
XPAADDR0 XPAADDR0 8
TP49
11 XCFIORDY W4 XCFIORD
17 XCFCS1N AA3 XCFIOWR
10 XCFCS0N V4 XCFIORY
16 XCFPWRN R5 XCFCS1N
AA2 XCFCS0N
U5 XCFPWRN
Y3 XCFCD1N
Y2 XCFRSTN
18 XCFINT AA1 XCFINT
10 XCFADD2 T6 XCFADD2
P6 XCFADD1
T5 XCFADD0
10 XNDCLE U3 XNDCLE
10 XNDRNB U4 XNDRNB
10 XNDCSN V3 XNDCSN
10 XNDWEN W1 XNDWEN
10 XNDALE W3 XNDALE
10 XNDCS1N W2 XNDCS1N
10 XNDREN Y1 XNDREN
10,11 XFHDATA0 Y4 XFHDAT0
10,11 XFHDATA1 R6 XFHDAT1
10,11 XFHDATA2 AA4 XFHDAT2
10,11 XFHDATA3 W5 XFHDAT3
10,11 XFHDATA4 W6 XFHDAT4
10,11 XFHDATA5 Y5 XFHDAT5
10,11 XFHDATA6 T7 XFHDAT6
10,11 XFHDATA7 AA5 XFHDAT7
11 XFHDATA8 AA6 XFHDAT8
11 XFHDATA9 AA8 XFHDAT9
11 XFHDATA10 Y6 XFHDAT10
11 XFHDATA11 U6 XFHDAT11
11 XFHDATA12 V5 XFHDAT12
11 XFHDATA13 V6 XFHDAT13
11 XFHDATA14 AA7 XFHDAT14
11 XFHDATA15 Y7 XFHDAT15
XPADQS0 J19 XPADQS0 XPADQS0 8
XPADQSN0 J18 XPADQSN0 XPADQSN0 8
XPADQM0 J21 XPADQM0 XPADQM0 8
XPADATA7 L20 XPADATA7 XPADATA7 8
XPADATA6 K18 XPADATA6 XPADATA6 8
XPADATA5 K19 XPADATA5 XPADATA5 8
XPADATA4 K20 XPADATA4 XPADATA4 8
XPADATA3 K21 XPADATA3 XPADATA3 8
XPADATA2 J20 XPADATA2 XPADATA2 8
XPADATA1 K17 XPADATA1 XPADATA1 8
XPADATA0 H19 XPADATA0 XPADATA0 8
XPADQS1 G20 XPADQS1 XPADQS1 8
XPADQSN1 G21 XPADQSN1 XPADQSN1 8
XPADQM1 F20 XPADQM1 XPADQM1 8
XPADATA15 H20 XPADATA15 XPADATA15 8
XPADATA14 H21 XPADATA14 XPADATA14 8
XPADATA13 H18 XPADATA13 XPADATA13 8
XPADATA12 G19 XPADATA12 XPADATA12 8
XPADATA11 G18 XPADATA11 XPADATA11 8
XPADATA10 F19 XPADATA10 XPADATA10 8
XPADATA9 E21 XPADATA9 XPADATA9 8
XPADATA8 F21 XPADATA8 XPADATA8 8
XPADQS2 Y19 XPADQS2 XPADQS2 8
XPADQSN2 AA19 XPADQSN2 XPADQSN2 8
XPADQM2 W18 XPADQM2 XPADQM2 8
XPADATA23 AA17 XPADATA23 XPADATA23 8
XPADATA22 Y17 XPADATA22 XPADATA22 8
XPADATA21 W17 XPADATA21 XPADATA21 8
XPADATA20 W16 XPADATA20 XPADATA20 8
XPADATA19 AA18 XPADATA19 XPADATA19 8
XPADATA18 Y18 XPADATA18 XPADATA18 8
XPADATA17 V17 XPADATA17 XPADATA17 8
XPADATA16 V18 XPADATA16 XPADATA16 8
XPADQS3 W20 XPADQS3 XPADQS3 8
XPADQSN3 W21 XPADQSN3 XPADQSN3 8
XPADQM3 V21 XPADQM3 XPADQM3 8
XPADATA31 W19 XPADATA31 XPADATA31 8
XPADATA30 AA20 XPADATA30 XPADATA30 8
XPADATA29 AA21 XPADATA29 XPADATA29 8
XPADATA28 V19 XPADATA28 XPADATA28 8
XPADATA27 Y21 XPADATA27 XPADATA27 8
XPADATA26 Y20 XPADATA26 XPADATA26 8
XPADATA25 V20 XPADATA25 XPADATA25 8
XPADATA24 U21 XPADATA24 XPADATA24 8
XPADWEN M20
XPACLK1 E17
XPANCLK1 G17
XPACLK U18
XPANCLK U19
XPACKE L21
XPALPCKE T17
XPADDR2ODT T18
XPADDR2ODT1 F18
XPADCSN1 H17
XPADCSN0 U20
8 XPADWEN XPADWEN
8 XPACLK XPACLK
8 XPANCLK XPANCLK
8 XPACKE XPACKE
8 XPADDR2ODT XPADDR2ODT
8 XPADCSN0 XPADCSN0

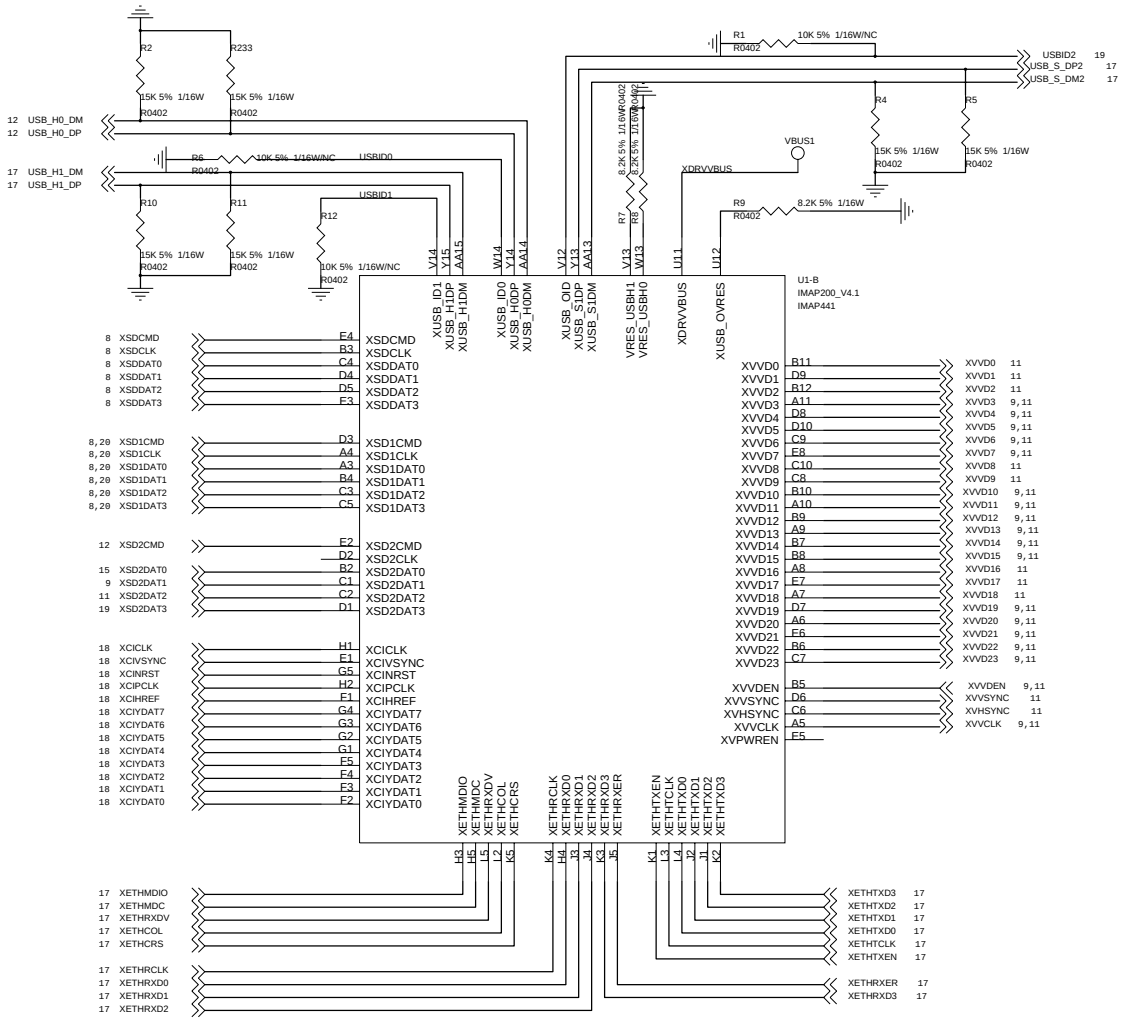
R2
R233
15K 5% 1/16W
R0402
12 USB_H0_DM
12 USB_H0_DP
17 USB_H1_DM
17 USB_H1_DP
R6
10K 5% 1/16W/NC
USBID0
R10
R11
R12
USBID1
10K 5% 1/16W/NC
R1
10K 5% 1/16W/NC
USBID2 19
USB_S_DP2 17
USB_S_DM2 17
R4
R5
VBUS1
XDRVVBUS
R7
R8
8.2K 5% 1/16W
R9
8.2K 5% 1/16W
U1-B
IMAP200_V4.1
IMAP441
XUSB_ID1
XUSB_H1DP
XUSB_H1DM
XUSB_ID0
XUSB_H0DP
XUSB_H0DM
XUSB_OID
XUSB_S1DP
XUSB_S1DM
VRES_USBH1
VRES_USBH0
XDRVVBUS
XUSB_OVRES
XSDCMD
XSDCLK
XSDDAT0
XSDDAT1
XSDDAT2
XSDDAT3
XSD1CMD
XSD1CLK
XSD1DAT0
XSD1DAT1
XSD1DAT2
XSD1DAT3
XSD2CMD
XSD2CLK
XSD2DAT0
XSD2DAT1
XSD2DAT2
XSD2DAT3
XCICLK
XCIVSYNC
XCINRST
XCIPCLK
XCIHREF
XCIYDAT7
XCIYDAT6
XCIYDAT5
XCIYDAT4
XCIYDAT3
XCIYDAT2
XCIYDAT1
XCIYDAT0
XVVD0
XVVD1
XVVD2
XVVD3
XVVD4
XVVD5
XVVD6
XVVD7
XVVD8
XVVD9
XVVD10
XVVD11
XVVD12
XVVD13
XVVD14
XVVD15
XVVD16
XVVD17
XVVD18
XVVD19
XVVD20
XVVD21
XVVD22
XVVD23
XVVDEN
XVVSYNC
XVHSYNC
XVVCLK
XVPWREN
XETHMDIO
XETHMDC
XETHRXDV
XETHCOL
XETHCRS
XETHRCLK
XETHRXD0
XETHRXD1
XETHRXD2
XETHRXD3
XETHRXER
XETHTXEN
XETHTCLK
XETHTXD0
XETHTXD1
XETHTXD2
XETHTXD3

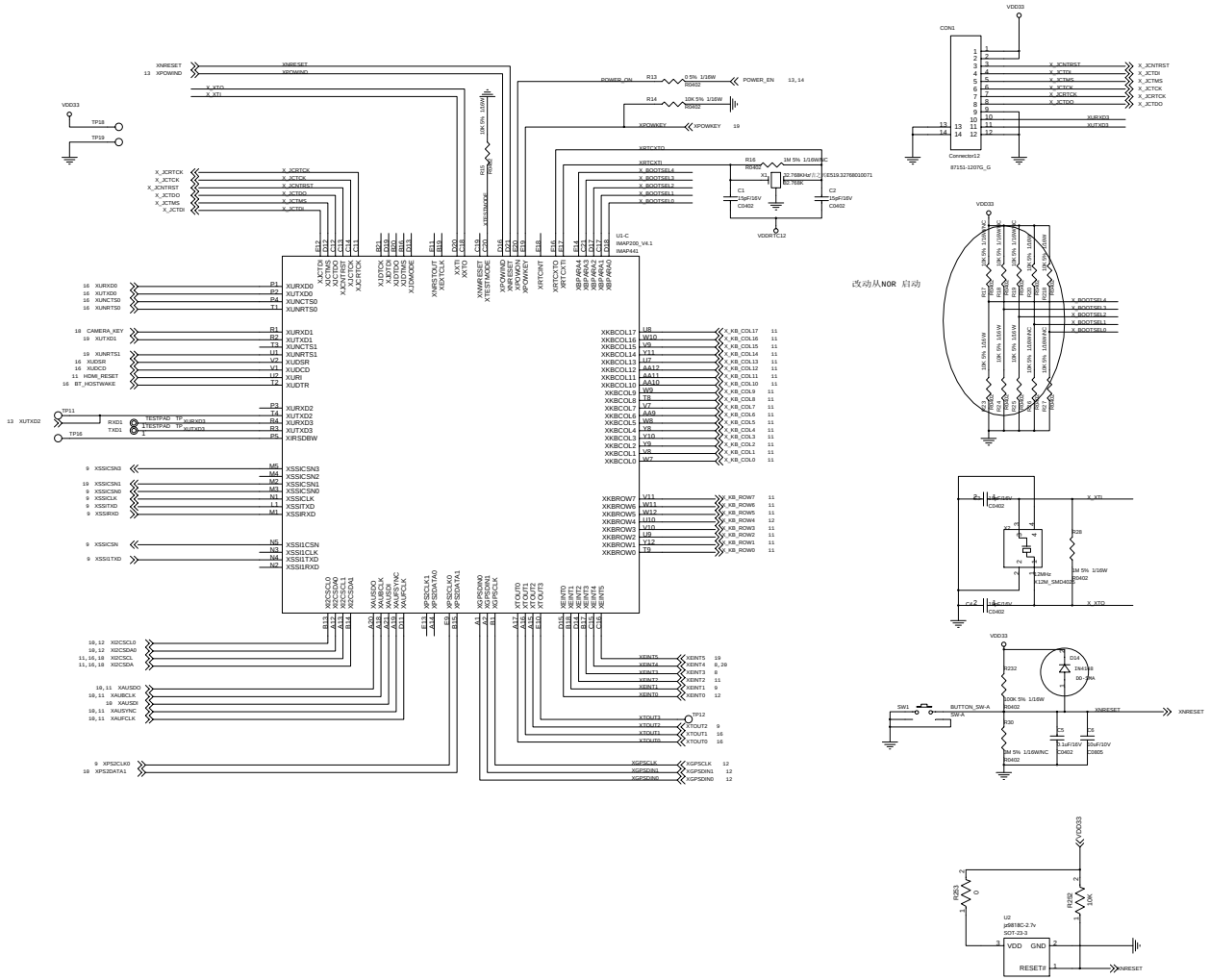
改动从NOR 启动
U1-C
IMAP200_V4.1
IMAP441
CON1
Connector12
87151-1207G_G
U2
ps881BC-2.7v
SOT-23-3
VDD
GND
RESET#

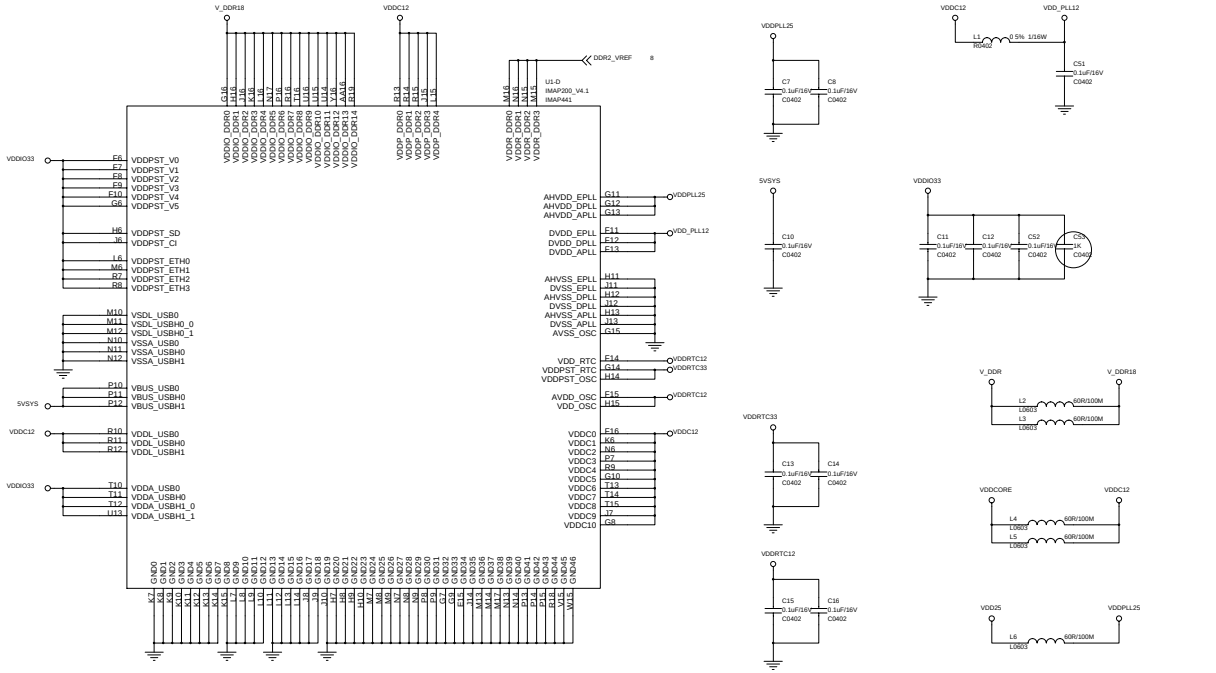

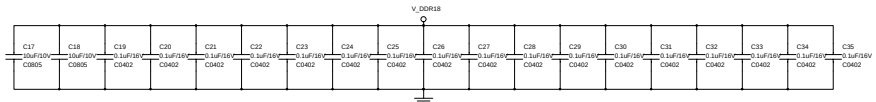

加了两个电容

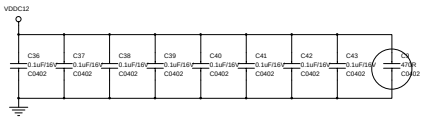

5 4 3 2 1

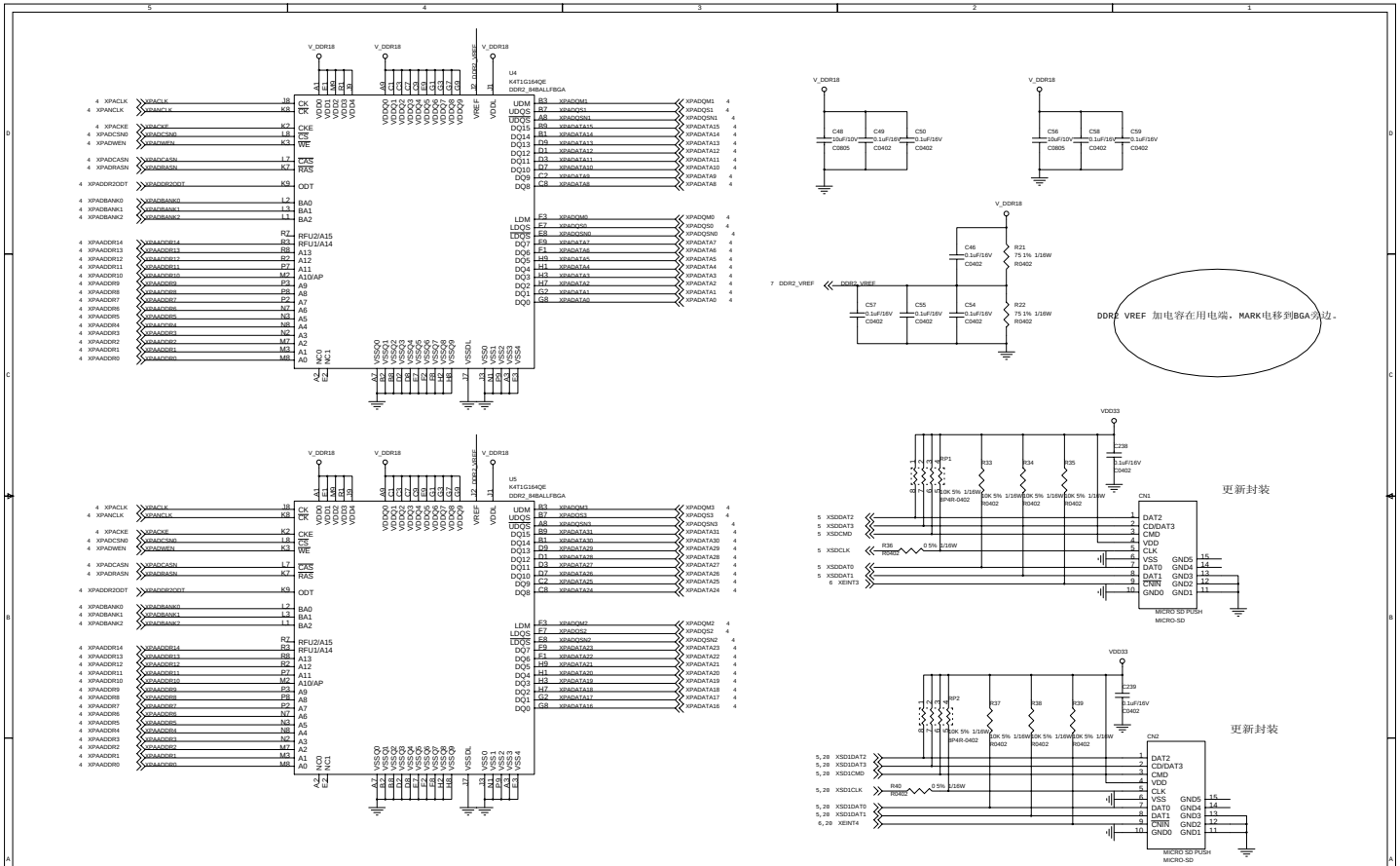

上海盈方微电子有限公司			
Title	INFOTM IX200 MOBILE INTERNET DEVICE		
Size C	Document Number DDR2_MICRO SD		Rev 0A
Date: Monday, September 06, 2010		Sheet 5 of 16	

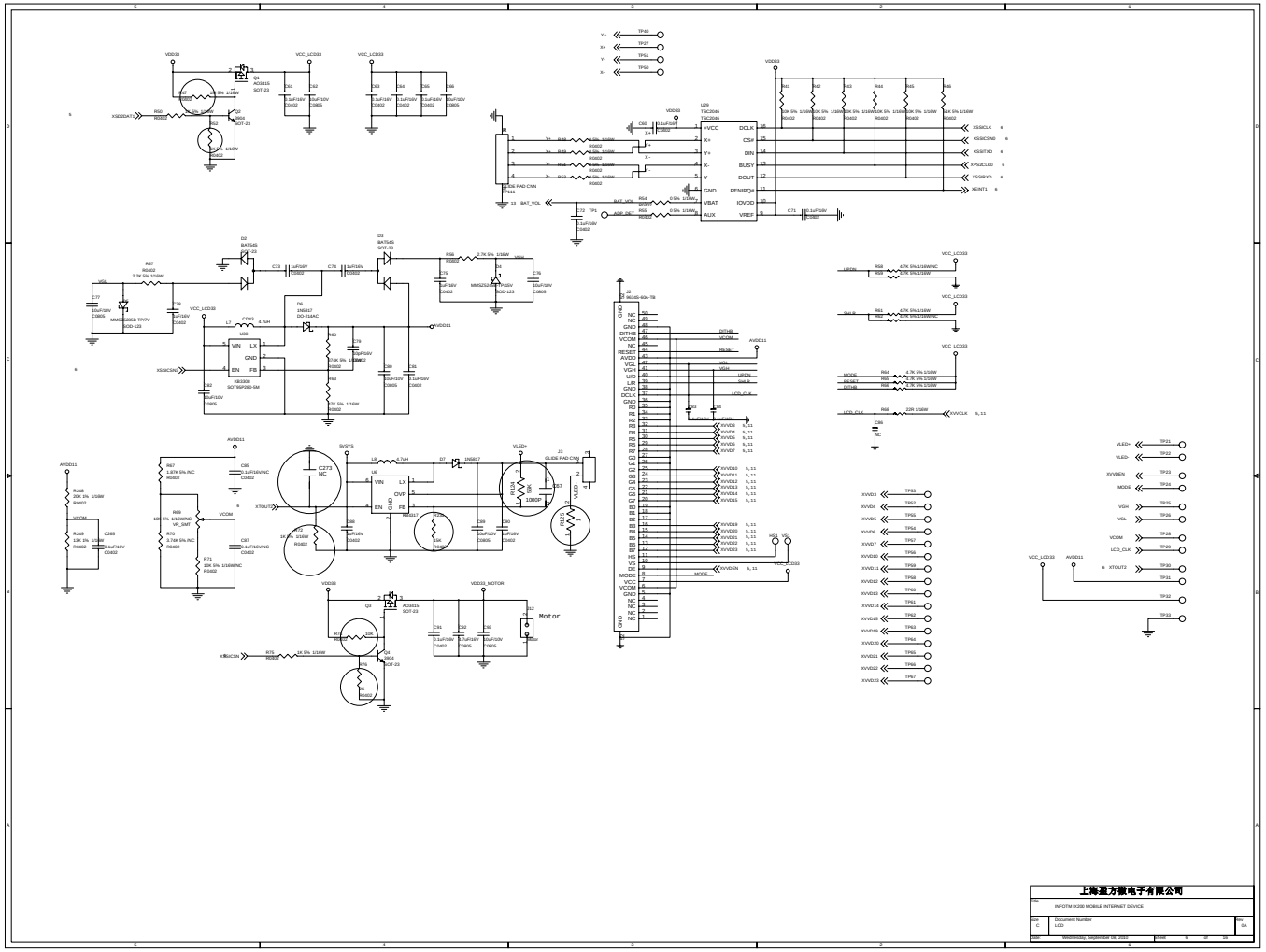

上海皇方板电子有限公司

Title	INFOTM IX230 MOBILE INTERNET DEVICE		
Size C	Document Number LCD		Rev 0A
Date: Wednesday, September 08, 2010	Sheet 5 of 26		

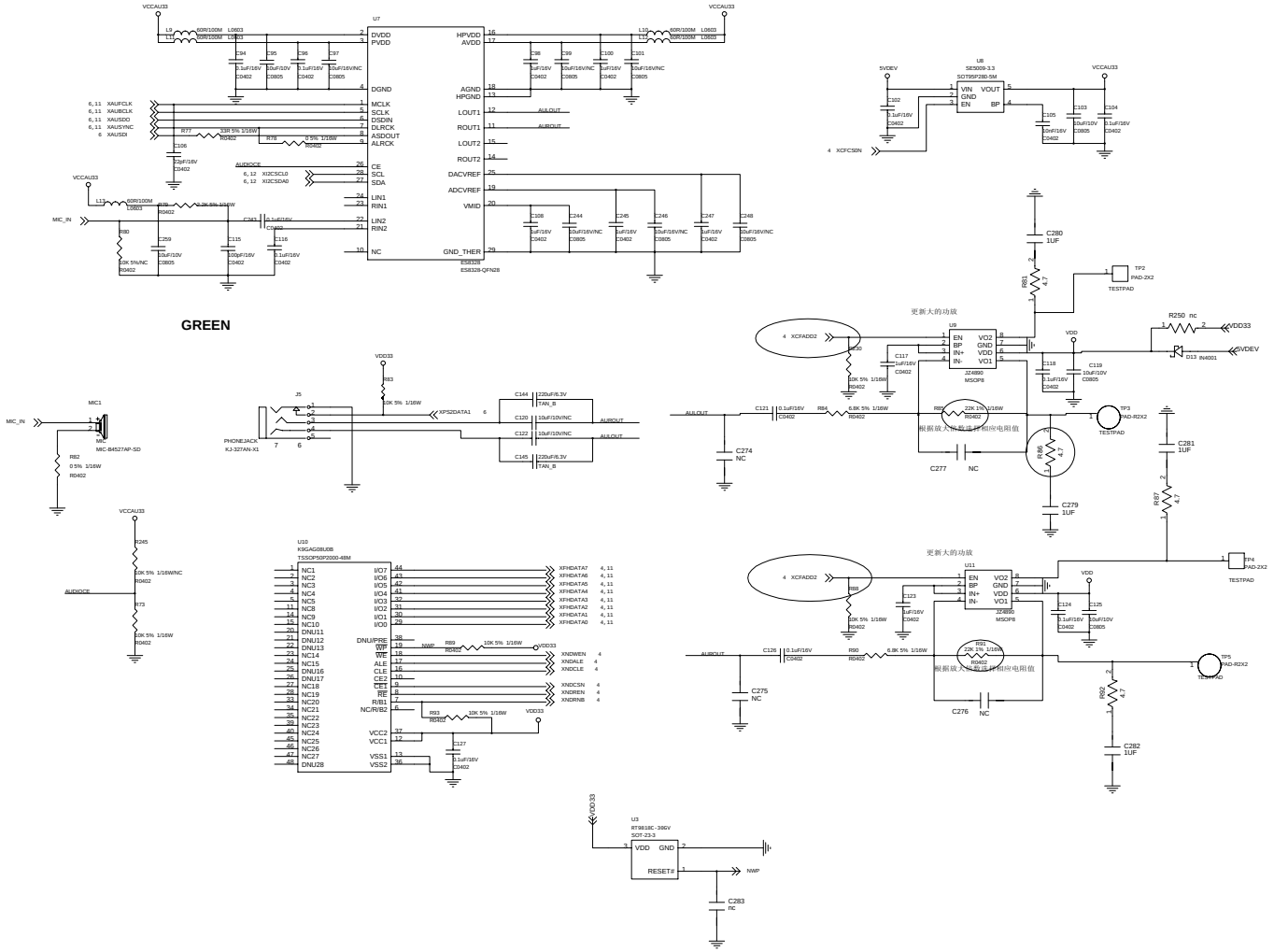
GREEN
U7
ES8328
ES8328-QFN28
VCCAU33
DVDD
PVDD
DGND
MCLK
SCLK
DSDIN
DLRCK
ASDOUT
ALRCK
CE
SCL
SDA
LIN1
RIN1
LIN2
RIN2
NC
HPVDD
AVDD
AGND
HPGND
LOUT1
ROUT1
LOUT2
ROUT2
DACVREF
ADCVREF
VMID
GND_THER
XAUFCLK
XAUBCLK
XAUSDO
XAUSYNC
XAUSDI
AUDIOCE
XI2CSCL0
XI2CSDA0
MIC_IN
AUDOUT
U8
SE5009-3.3
SOT95P286-5M
5VDEV
VIN
GND
EN
VOUT
BP
XCFCSON
C280
1UF
R91
4.7
TP2
PAD-2X2
TESTPAD
更新大的功放
U9
JZ4890
MSOP8
XCFADD2
EN
BP
IN+
IN-
VO2
GND
VDD
VO1
VDD
R250 nc
VDD33
5VDEV
D13 IN4001
C119
10uF/10V
C0805
TP3
PAD-R2X2
根据放大倍数选择相应电阻值
C277
NC
C279
1UF
C281
1UF
R97
4.7
TP4
PAD-2X2
U11
XCFADD2
C275
NC
C276
NC
C282
1UF
TP5
PAD-R2X2
MIC1
MIC-B4527AP-SD
R82
0.5% 1/16W
R0402
PNONEJACK
KJ-32TAN-X1
J5
R83
10K 5% 1/16W
XPS20DATA1
C144
220uF/6.3V
TAN_B
C120
10uF/10V/NC
C122
10uF/10V/NC
C145
220uF/6.3V
TAN_B
C274
NC
R45
10K 5% 1/16W/NC
R0402
R73
10K 5% 1/16W
R0402
U10
K9GAG08U0B
TSSOP50P0000-48M
I/O7
I/O6
I/O5
I/O4
I/O3
I/O2
I/O1
I/O0
DNU/PRE
WP
WE
ALE
CLE
CE2
CE1
RE
R/B1
NC/R/B2
VCC2
VCC1
VSS1
VSS2
XFHDATA7
XFHDATA6
XFHDATA5
XFHDATA4
XFHDATA3
XFHDATA2
XFHDATA1
XFHDATA0
XNDWEN
XNDALE
XNDCLE
XNDCSN
XNDREN
XNDRNB
NWP
R89
R0402
R93
R0402
C127
0.1uF/16V
C0402
U3
RT9818C-.36GV
SOT-23-3
VDD
GND
RESET#
C283
nc

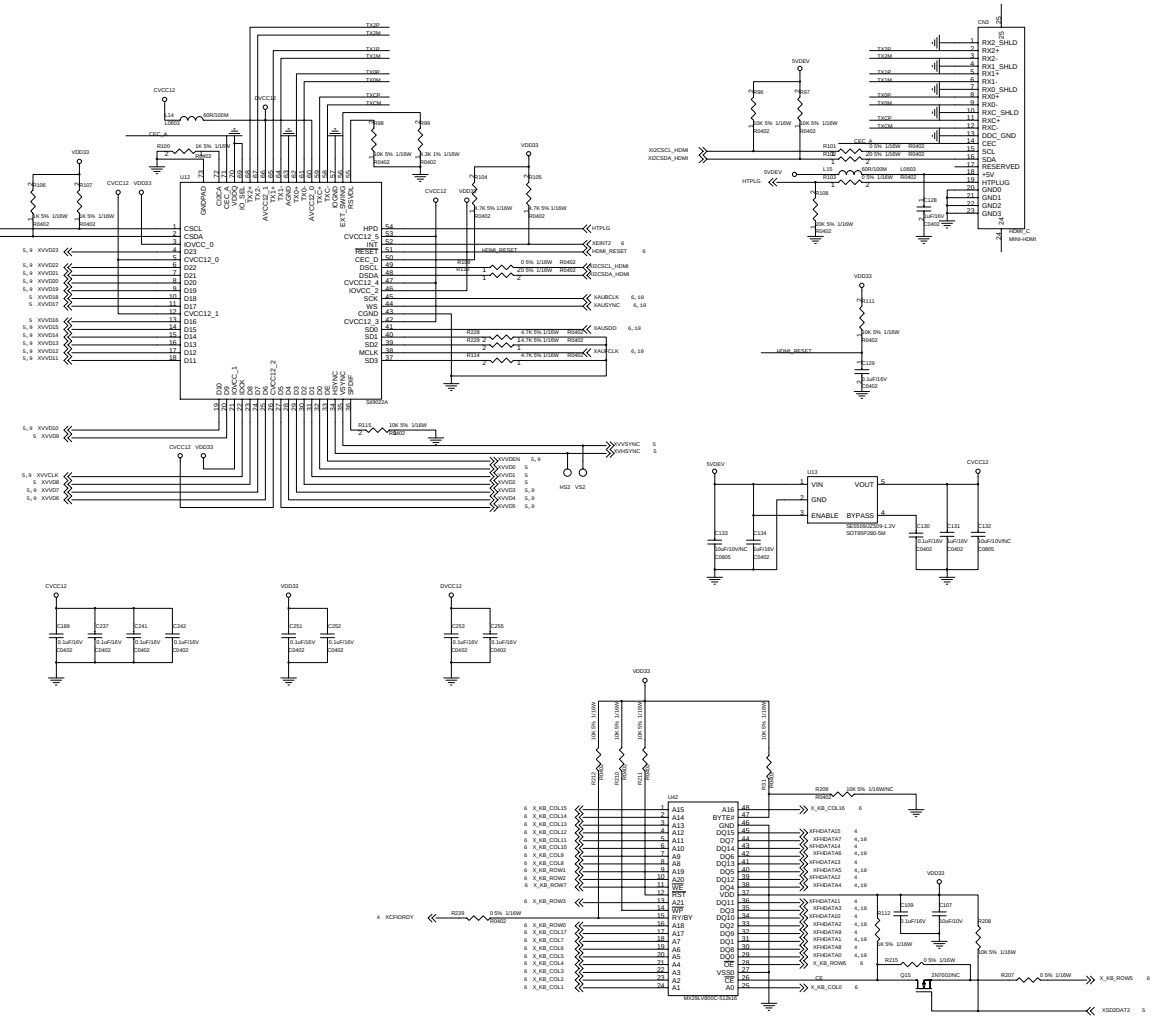
SIW022A
U12
U13
U42
CN2
HDMI_C
MINI-HDMI
SOT89P280-5M
MX29LV800C-S1A1B
CVCC12
VDD33
DVCC12
5VDEV
HDMI_RESET
HTPLG
CEC_A
X12CSCL_HDMI
X12CSDA_HDMI
XAUDCLK
XAUSYNC
XAUDDO
XVVSYNC
XHVSYNC
XVVDEN
XVVD0
XVVD1
XVVD2
XVVD3
XVVD4
XVVD5
XVVCLK
XVVD6
XVVD7
XVVD8
XVVD9
XVVD10
X_KB_COL16
X_KB_ROW5
XSD2DAT2
XCFIORDY
HS2
VS2

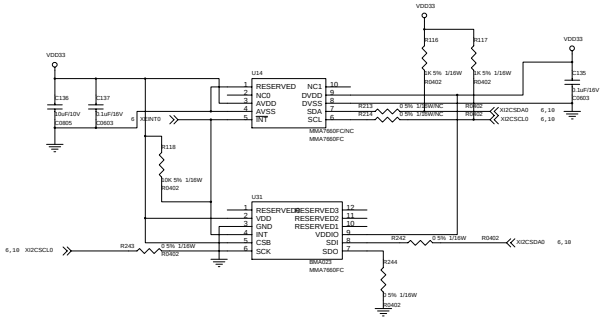

USB WIFI MODULE

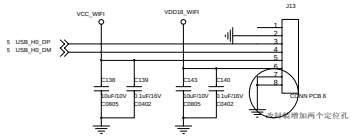

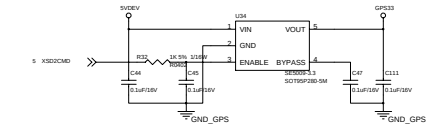

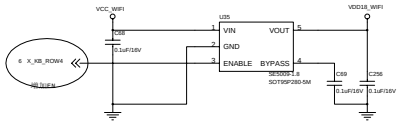

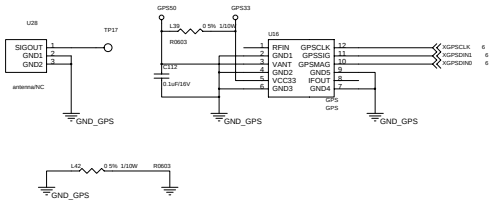

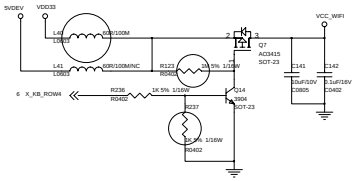

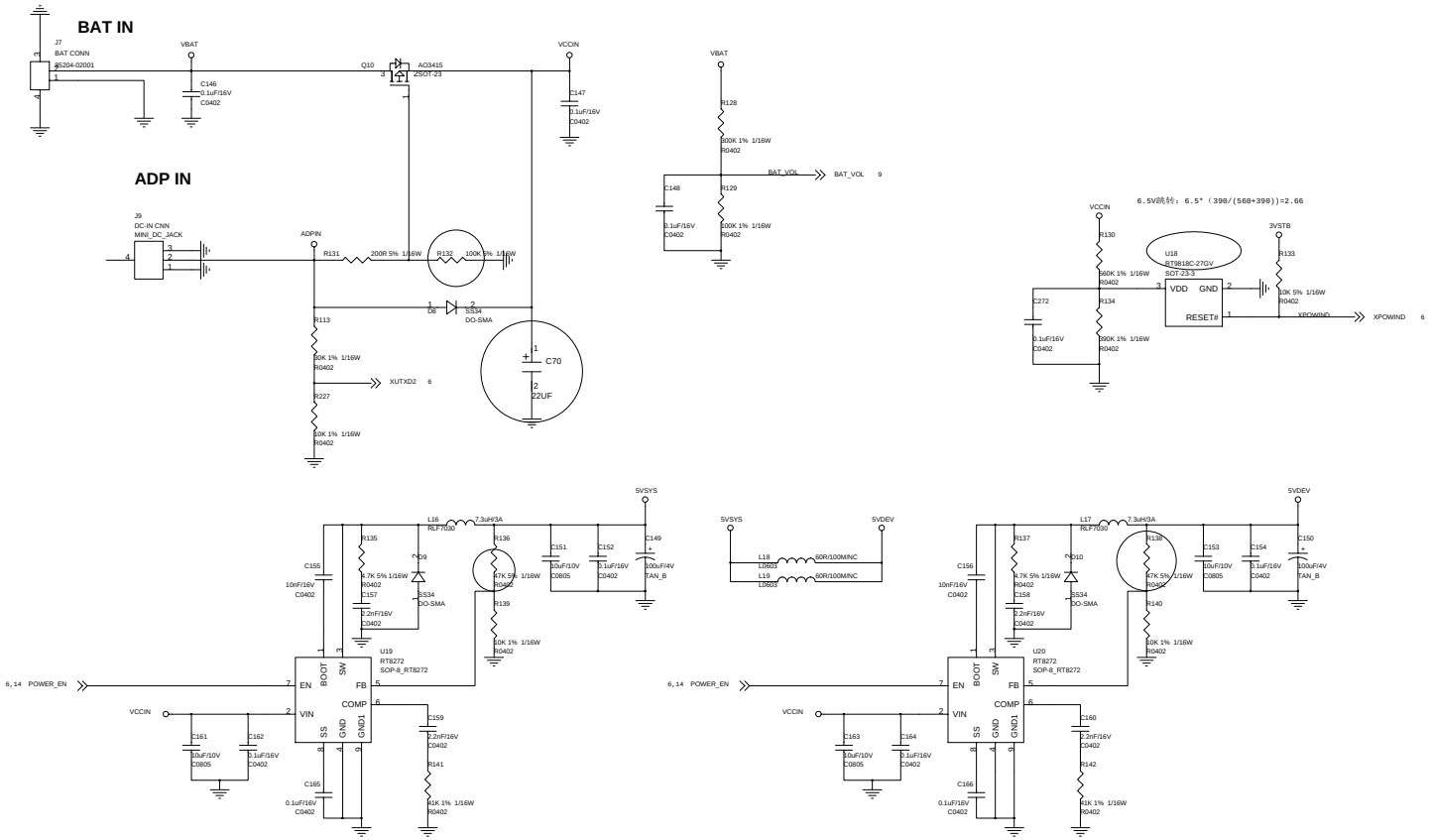
BAT IN
J7
BAT CONN
JS204-02001
VBAT
C146
0.1uF/16V
C0402
Q10
AO3415
2SOT-23
VCCIN
C147
0.1uF/16V
C0402
ADP IN
J9
DC-IN CNN
MINI_DC_JACK
ADPIN
R131
200R 5% 1/16W
R132
100K 5% 1/16W
D8
SS34
DO-SMA
R113
90K 1% 1/16W
R0402
XUTXD2 6
R227
10K 1% 1/16W
R0402
C70
22UF
VBAT
R128
300K 1% 1/16W
R0402
BAT_VOL
BAT_VOL 9
C148
0.1uF/16V
C0402
R129
100K 1% 1/16W
R0402
6.5V跳转：6.5*（390/(560+390))=2.66
VCCIN
R130
560K 1% 1/16W
R0402
U18
RT9818C-27GV
SOT-23-3
VDD
GND
RESET#
3VSTB
R133
10K 5% 1/16W
R0402
XPOWIND
XPOWIND 6
C272
0.1uF/16V
C0402
R134
390K 1% 1/16W
R0402
5VSYS
L16
RLF7030
7.3uH/3A
R135
4.7K 5% 1/16W
R0402
D9
SS34
DO-SMA
C157
2.2nF/16V
C0402
R136
47K 5% 1/16W
R0402
R139
10K 1% 1/16W
R0402
C151
10uF/10V
C0805
C152
0.1uF/16V
C0402
C149
100uF/4V
TAN_B
C155
10nF/16V
C0402
U19
RT8272
SOP-8_RT8272
6,14 POWER_EN
EN
BOOT
SW
FB
COMP
VIN
SS
GND
GND1
VCCIN
C161
10uF/10V
C0805
C162
0.1uF/16V
C0402
C165
0.1uF/16V
C0402
C159
2.2nF/16V
C0402
R141
41K 1% 1/16W
R0402
5VSYS
5VDEV
L18
L0603
60R/100MINC
L19
L0603
60R/100MINC
5VDEV
L17
RLF7030
7.3uH/3A
R137
4.7K 5% 1/16W
R0402
D10
SS34
DO-SMA
C158
2.2nF/16V
C0402
R138
47K 5% 1/16W
R0402
R140
10K 1% 1/16W
R0402
C153
10uF/10V
C0805
C154
0.1uF/16V
C0402
C150
100uF/4V
TAN_B
C156
10nF/16V
C0402
U20
RT8272
SOP-8_RT8272
6,14 POWER_EN
EN
BOOT
SW
FB
COMP
VIN
SS
GND
GND1
VCCIN
C163
10uF/10V
C0805
C164
0.1uF/16V
C0402
C166
0.1uF/16V
C0402
C160
2.2nF/16V
C0402
R142
41K 1% 1/16W
R0402

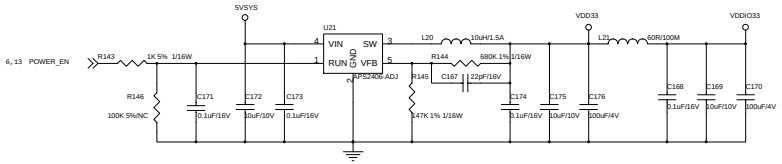

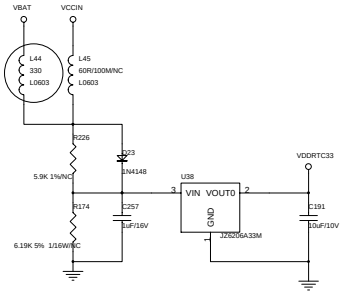

KB3369 SPEC: 2.2uH

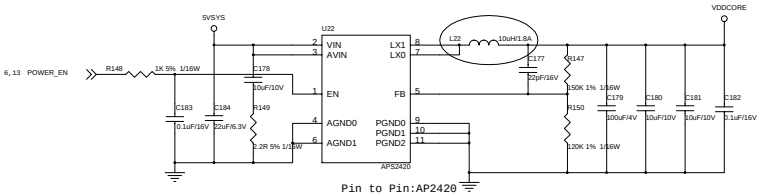

Pin to Pin:AP2420

1.35V

Vout=0.6*(1+R1/R2)
0.6*(1+150K/120K)=1.35V @2A

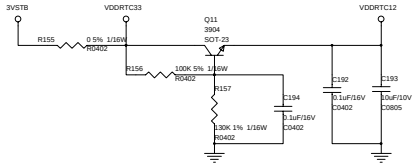

Vout=0.6*(1+R1/R2)
0.6*(1+200K/100K)=1.8v@600mA

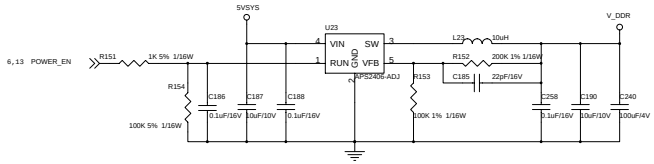

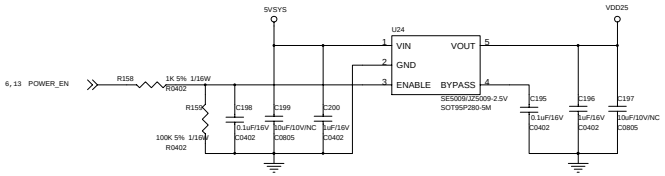

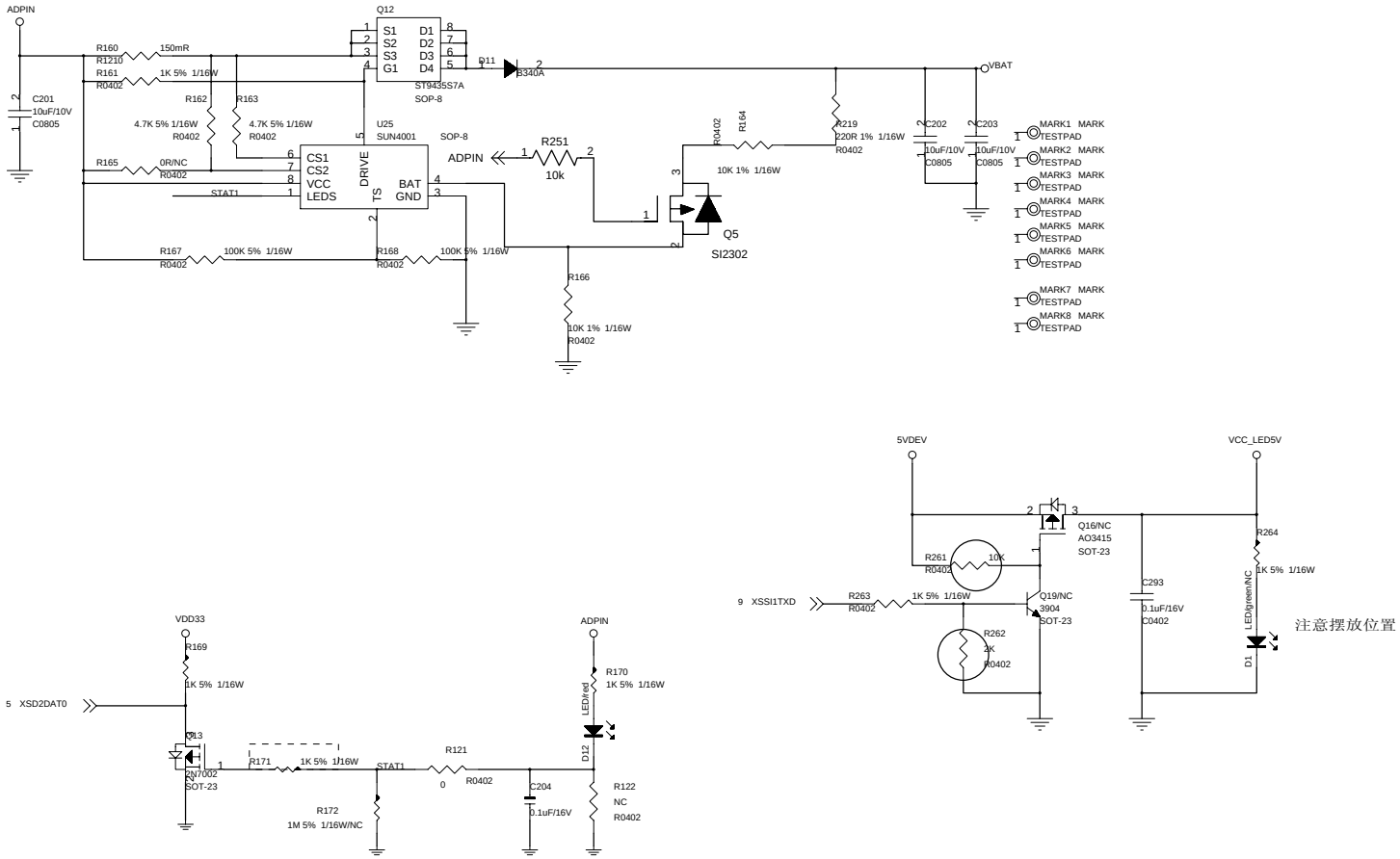
ADPIN
Q12
S1 D1
S2 D2
S3 D3
G1 D4
ST9435S7A
SOP-8
R160 150mR
R1210
R161 1K 5% 1/16W
R0402
C201
10uF/10V
C0805
R162
R163
4.7K 5% 1/16W
R0402
4.7K 5% 1/16W
R0402
D11
B340A
VBAT
U25
SUN4001
SOP-8
R165 0R/NC
R0402
CS1
CS2
VCC
LEDS
DRIVE
TS
BAT
GND
STAT1
ADPIN
R251
10k
R0402
R164
10K 1% 1/16W
R219
220R 1% 1/16W
R0402
C202
10uF/10V
C0805
C203
10uF/10V
C0805
Q5
SI2302
R167 100K 5% 1/16W
R0402
R168 100K 5% 1/16W
R0402
R166
10K 1% 1/16W
R0402
MARK1 MARK
TESTPAD
MARK2 MARK
TESTPAD
MARK3 MARK
TESTPAD
MARK4 MARK
TESTPAD
MARK5 MARK
TESTPAD
MARK6 MARK
TESTPAD
MARK7 MARK
TESTPAD
MARK8 MARK
TESTPAD
5VDEV
VCC_LED5V
Q16/NC
AO3415
SOT-23
R261
R0402
10K
9 XSSI1TXD
R263
R0402
1K 5% 1/16W
Q19/NC
3904
SOT-23
R262
2K
R0402
C293
0.1uF/16V
C0402
R264
1K 5% 1/16W
LED/green/NC
D1
注意摆放位置
VDD33
R169
1K 5% 1/16W
5 XSD2DAT0
Q13
2N7002
SOT-23
R171 1K 5% 1/16W
STAT1
R121
0
R0402
R172
1M 5% 1/16W/NC
C204
0.1uF/16V
ADPIN
R170
1K 5% 1/16W
LED/red
D12
R122
NC
R0402

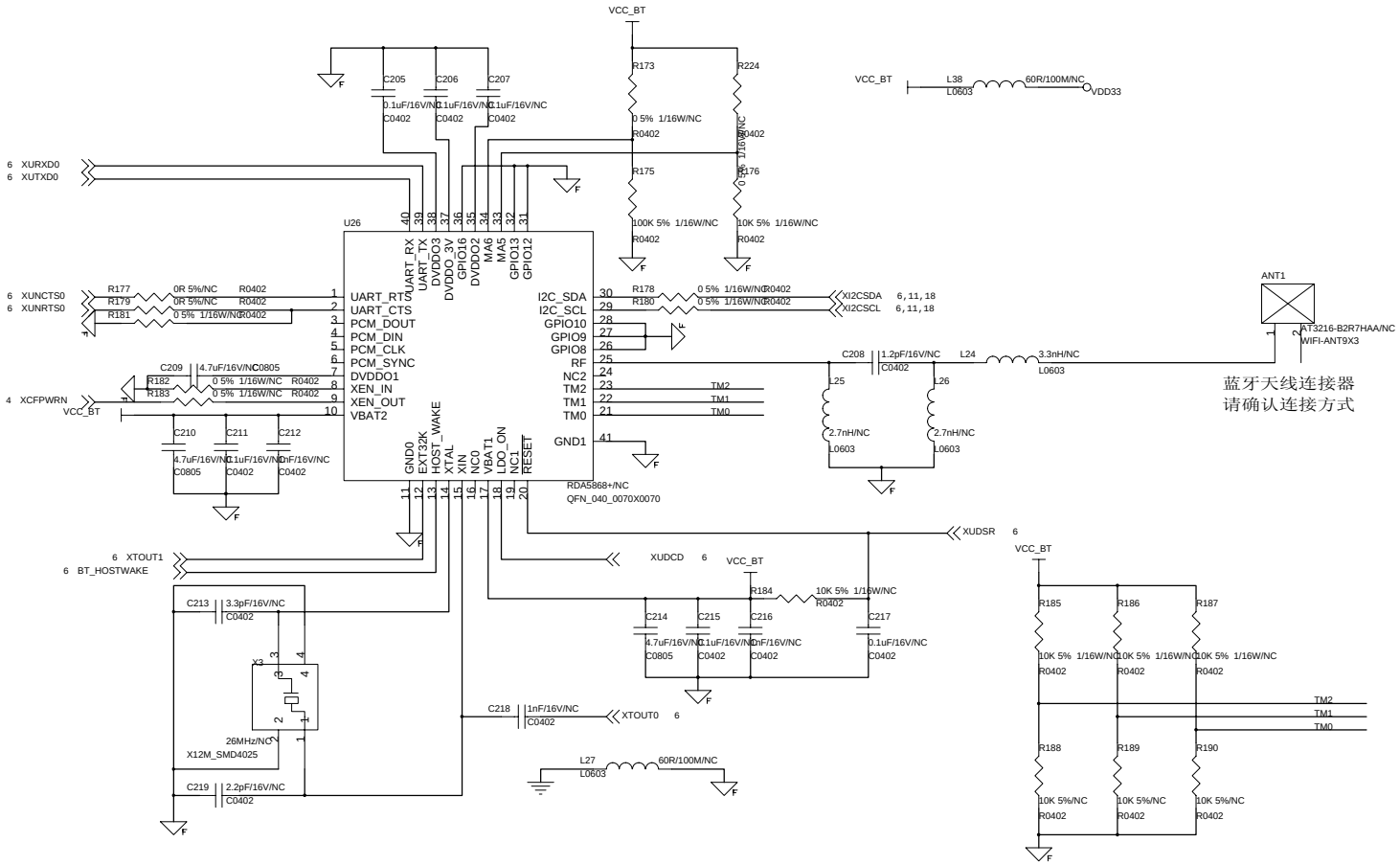
VCC_BT
C205
C206
C207
0.1uF/16V/NC
C0402
R173
R224
0 5% 1/16W/NC
R0402
R175
R176
100K 5% 1/16W/NC
10K 5% 1/16W/NC
L38
L0603
60R/100M/NC
VDD33
6 XURXD0
6 XUTXD0
U26
UART_RX
UART_TX
DVDDO3
DVDDO_3V
GPIO16
DVDDO2
MA6
MA5
GPIO13
GPIO12
UART_RTS
UART_CTS
PCM_DOUT
PCM_DIN
PCM_CLK
PCM_SYNC
DVDDO1
XEN_IN
XEN_OUT
VBAT2
I2C_SDA
I2C_SCL
GPIO10
GPIO9
GPIO8
RF
NC2
TM2
TM1
TM0
GND1
GND0
EXT32K
HOST_WAKE
XTAL
XIN
NC0
VBAT1
LDO_ON
NC1
RESET
RDA5868+/NC
QFN_040_0070X0070
6 XUNCTS0
6 XUNRTS0
R177
R179
R181
0R 5%/NC
R178
R180
XI2CSDA 6,11,18
XI2CSCL 6,11,18
ANT1
AT3216-B2R7HAA/NC
WIFI-ANT9X3
C208
1.2pF/16V/NC
L24
3.3nH/NC
L25
L26
2.7nH/NC
C209
4.7uF/16V/NC
C0805
R182
R183
4 XCFPWRN
C210
C211
C212
蓝牙天线连接器
请确认连接方式
XUDSR 6
XUDCD 6
6 XTOUT1
6 BT_HOSTWAKE
C213
3.3pF/16V/NC
X3
26MHz/NC
X12M_SMD4025
C219
2.2pF/16V/NC
C218
1nF/16V/NC
XTOUT0 6
L27
60R/100M/NC
R184
10K 5% 1/16W/NC
C214
C215
C216
C217
0.1uF/16V/NC
R185
R186
R187
R188
R189
R190
10K 5%/NC

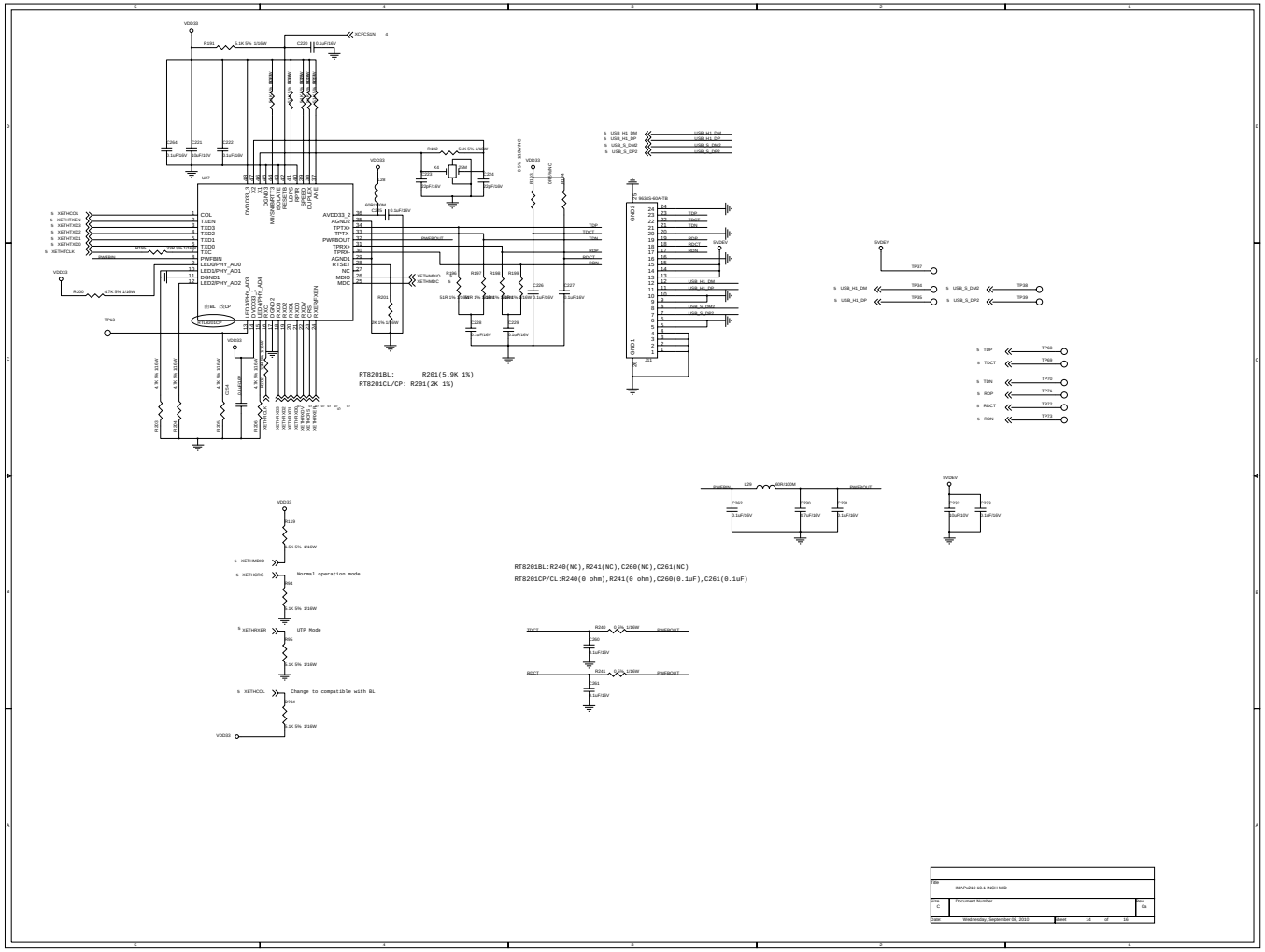

Title	RAPs210 10.1 INCH MID		
Size C	Document Number		Rev 0A
Date	Wednesday, September 08, 2010	Sheet 14 of 16	

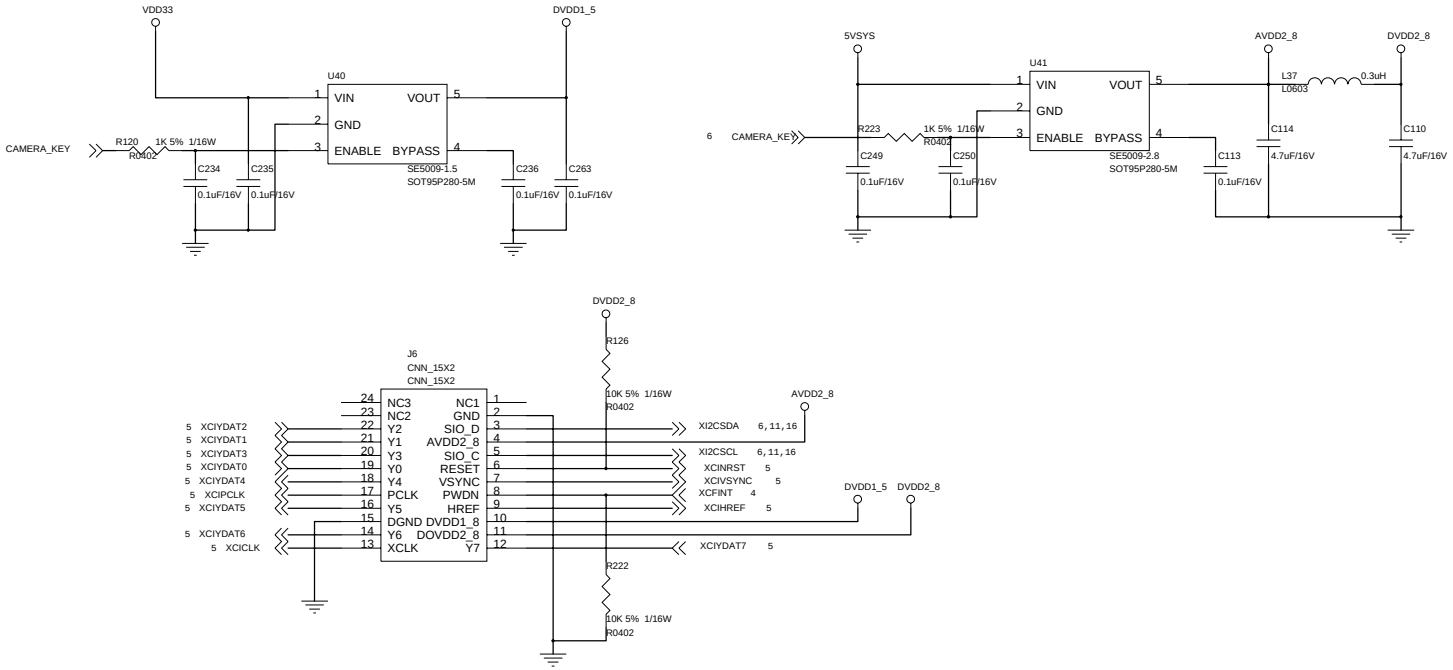
VDD33
DVDD1_5
U40
VIN
VOUT
GND
ENABLE
BYPASS
SE5009-1.5
SOT95P280-5M
CAMERA_KEY
R120
R0402
1K 5% 1/16W
C234
C235
C236
C263
0.1uF/16V
5VSYS
AVDD2_8
DVDD2_8
U41
SE5009-2.8
SOT95P280-5M
6
R223
R0402
1K 5% 1/16W
C249
C250
C113
C114
C110
L37
L0603
0.3uH
4.7uF/16V
J6
CNN_15X2
CNN_15X2
NC3
NC2
Y2
Y1
Y3
Y0
Y4
PCLK
Y5
DGND
Y6
XCLK
NC1
GND
SIO_D
AVDD2_8
SIO_C
RESET
VSYNC
PWDN
HREF
DVDD1_8
DOVDD2_8
Y7
R126
R222
10K 5% 1/16W
R0402
XCIYDAT2
XCIYDAT1
XCIYDAT3
XCIYDAT0
XCIYDAT4
XCIPCLK
XCIYDAT5
XCIYDAT6
XCICLK
XI2CSDA
XI2CSCL
XCINRST
XCIVSYNC
XCFINT
XCIHREF
XCIYDAT7

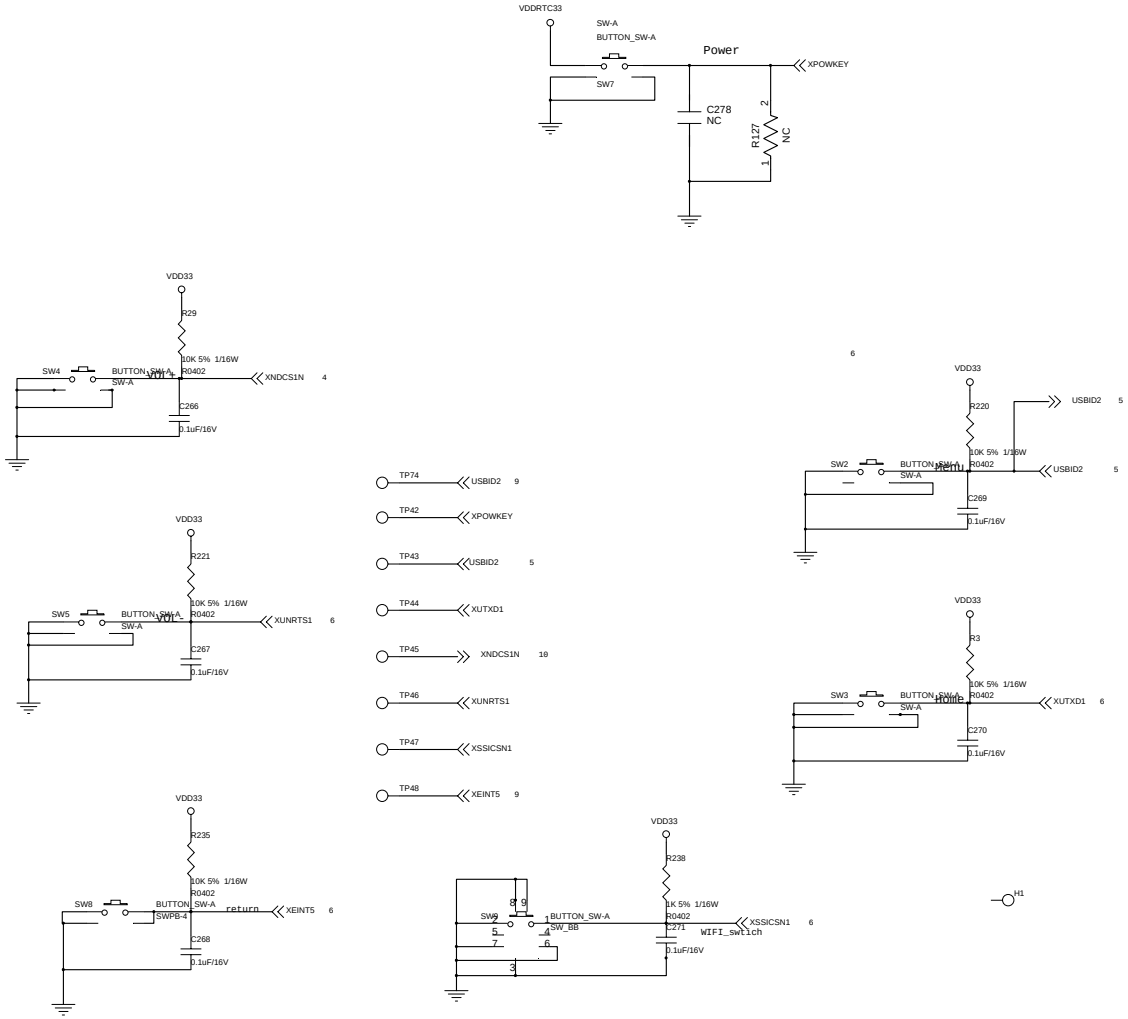
VDDRTC33
SW-A
BUTTON_SW-A
Power
XPOWKEY
SW7
C278
NC
R127
NC
VDD33
R29
10K 5% 1/16W
R0402
SW4
BUTTON_SW-A
SW-A
Vol+
XNDCS1N
C266
0.1uF/16V
VDD33
R221
10K 5% 1/16W
R0402
SW5
BUTTON_SW-A
SW-A
Vol-
XUNRTS1
C267
0.1uF/16V
VDD33
R235
10K 5% 1/16W
R0402
SW8
BUTTON_SW-A
SWPB-4
return
XEINT5
C268
0.1uF/16V
TP74
USBID2
TP42
XPOWKEY
TP43
USBID2
TP44
XUTXD1
TP45
XNDCS1N
TP46
XUNRTS1
TP47
XSSICSN1
TP48
XEINT5
VDD33
R220
USBID2
10K 5% 1/16W
R0402
SW2
BUTTON_SW-A
SW-A
Menu
USBID2
C269
0.1uF/16V
VDD33
R3
10K 5% 1/16W
R0402
SW3
BUTTON_SW-A
SW-A
Home
XUTXD1
C270
0.1uF/16V
VDD33
R238
1K 5% 1/16W
R0402
SW9
BUTTON_SW-A
SW_BB
WIFI_switch
XSSICSN1
C271
0.1uF/16V
H1