PART NUMBER
50092513-001

REVISION HISTORY					
REV	DOCUMENT	DESCRIPTION	CHG'D BY	DATE	APPROVED
A	0108613	INITIAL RELEASE	SBH	2014-03-12	S. MOHAN
A1	-	-	SR	-	-

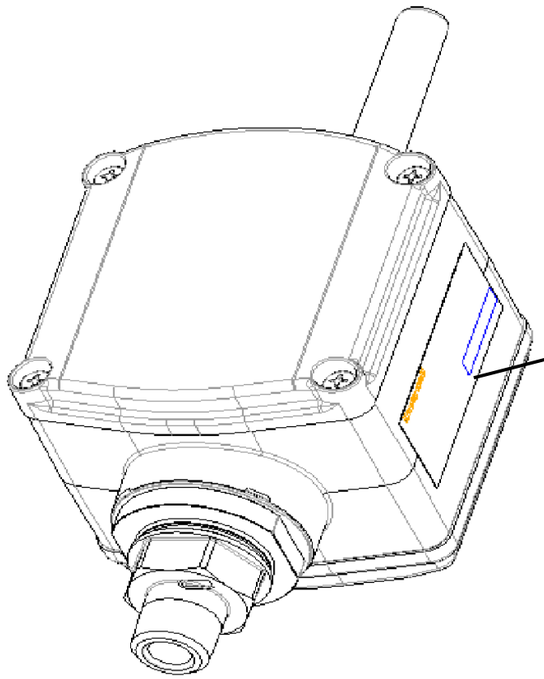

Label Location

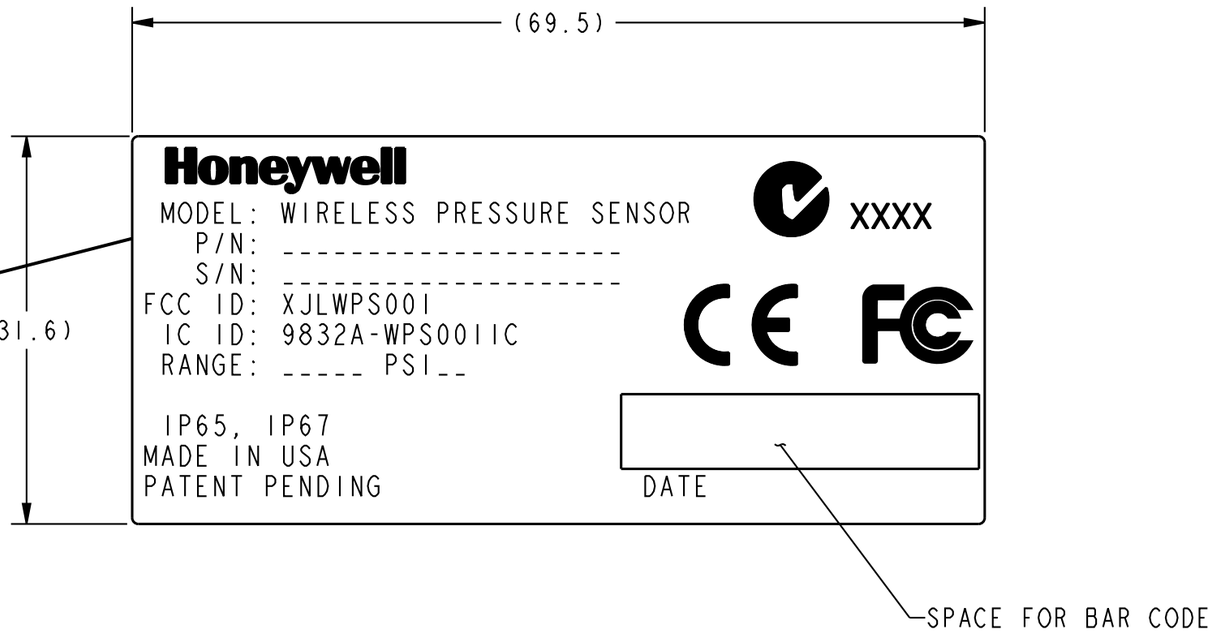

PRELIMINARY INFORMATION ONLY

THIS DRAWING IS NOT RELEASED. SUBJECT TO CHANGE WITHOUT REVISION LEVEL. SEE HONEYWELL CONFIDENTIAL FOR PROPRIETARY INFORMATION CONCERNING THIS DRAWING.

NOTES:

1 - MADE FROM 014-0260-01

2 - ALL TEXT AND SYMBOLS TO BE APPROXIMATE SIZE AND LOCATION AS SHOWN

3 - MUST BE RoHS AND REACH COMPLIANT

UNLESS OTHERWISE SPECIFIED
DIMENSIONS ARE IN MM

DECIMAL TOL NO PLACE --- ±0.5
1 PLACE --- ±0.3
2 PLACE --- ±0.15
3 PLACE --- ±0.05
ANGULAR TOL - ±2° CHAMFER - ±5°

THIRD ANGLE PROJECTION

MATERIAL

FINISH

APPLICABLE DOCUMENTS: ASME Y14.100-2004
ASME Y14.5-2009

COMPUTER GENERATED DRAWING: PRO/ENGINEER

Honeywell

TITLE
LABEL
WIRELESS PRESSURE SENSOR

SIZE	CAGE CODE	DWG NO	TYPE	REV
A3	-	50092513	E	A1

SCALE 2:1 REF WT: SHEET 1 of 1

RELEASE DATE	2014-03-12
DRW: B. SANGANNA	2014-03-12
RDE: S. MOHAN	2014-03-12
QA: G. ESZTER	2014-03-12
CHK: R. SADYOJATHA	2014-03-12

HONEYWELL CONFIDENTIAL
THIS DOCUMENT CONTAINS PROPRIETARY INFORMATION AND SUCH INFORMATION MAY NOT BE DISCLOSED TO OTHERS FOR ANY PURPOSE, NOR USED FOR MANUFACTURING PURPOSE'S WITHOUT WRITTEN PERMISSION FROM HONEYWELL