| REVISION RECORD | | | |
|---|---|---|---|
| LTR | ECO NO: | APPROVED: | DATE: |
| | | | |
| | | | |
| | | | |
| | | | |

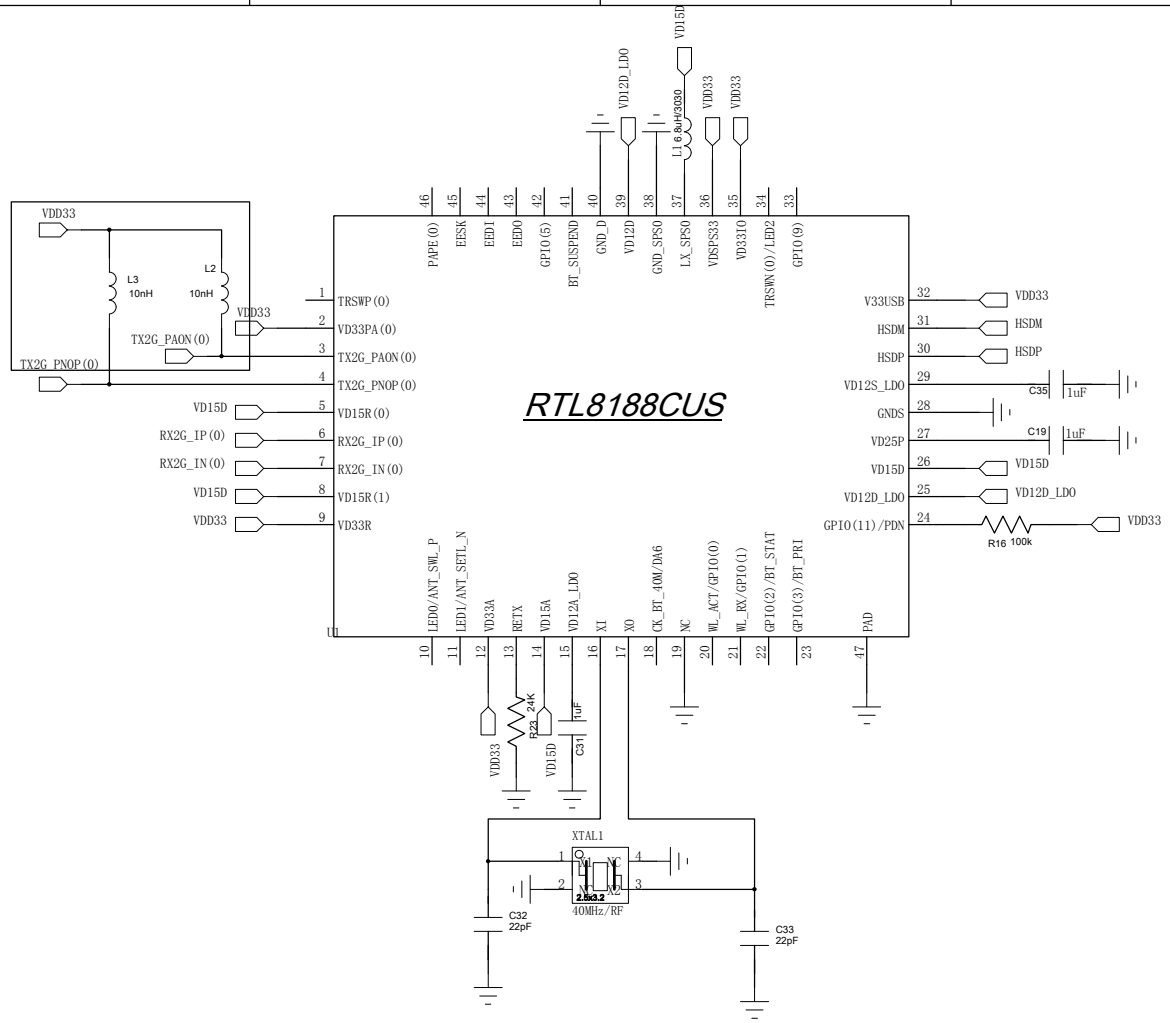


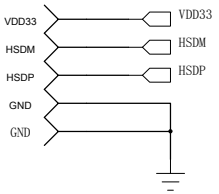


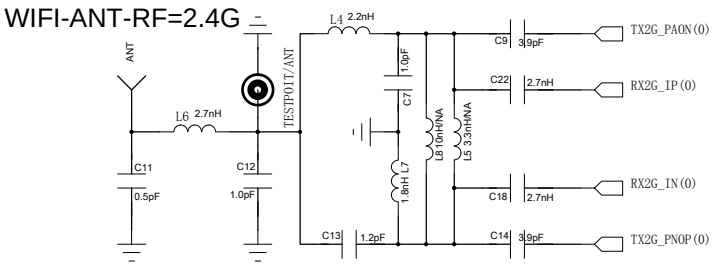


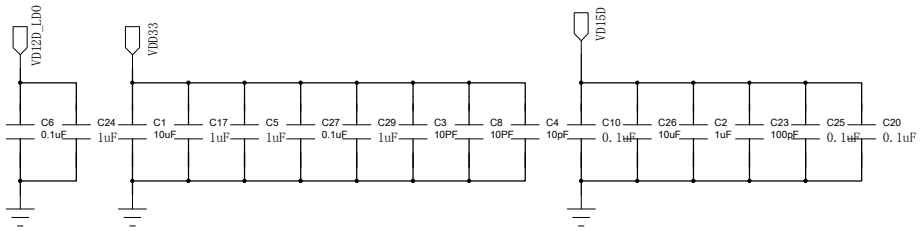


| | | | |
|---|---|---|---|
| DRAWN: Lavender | DATED: 2011.3.18 | COMPANY: RL-LINK | |
| CHECKED: | DATED: | TITLE: RL-UM02BS-8188CUSB | |
| QUALITY CONTROL: | DATED: | CODE: | SIZE: B / DRAWING NO: R&D 2011-3-18-01 / REV: 1.0 |
| RELEASED: | DATED: | SCALE: | SHEET: 1 OF 1 |