BLOCK

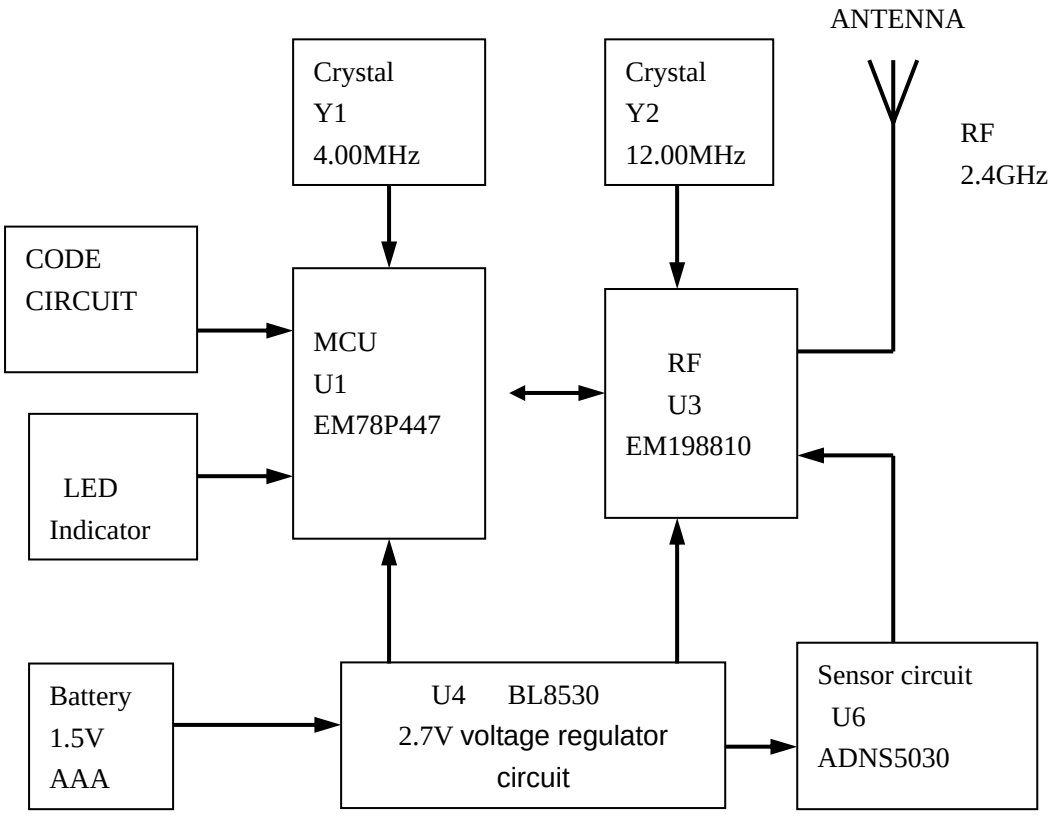
ANTENNA
Crystal
Y1
4.00MHz
Crystal
Y2
12.00MHz
RF
2.4GHz
CODE
CIRCUIT
MCU
U1
EM78P447
RF
U3
EM198810
LED
Indicator
Battery
1.5V
AAA
U4 BL8530
2.7V voltage regulator
circuit
Sensor circuit
U6
ADNS5030