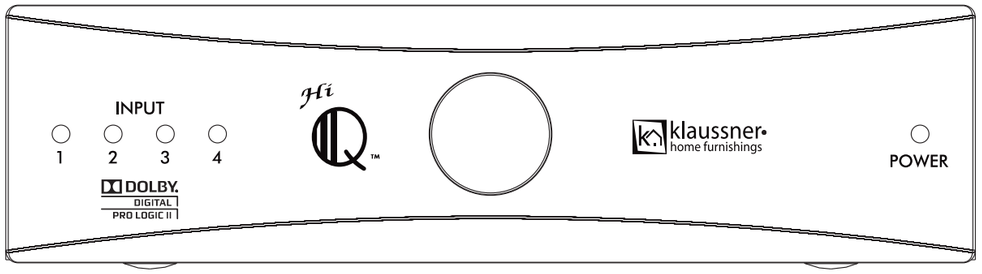

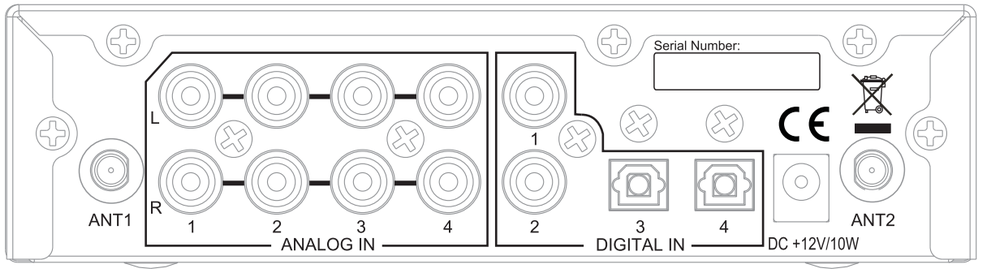

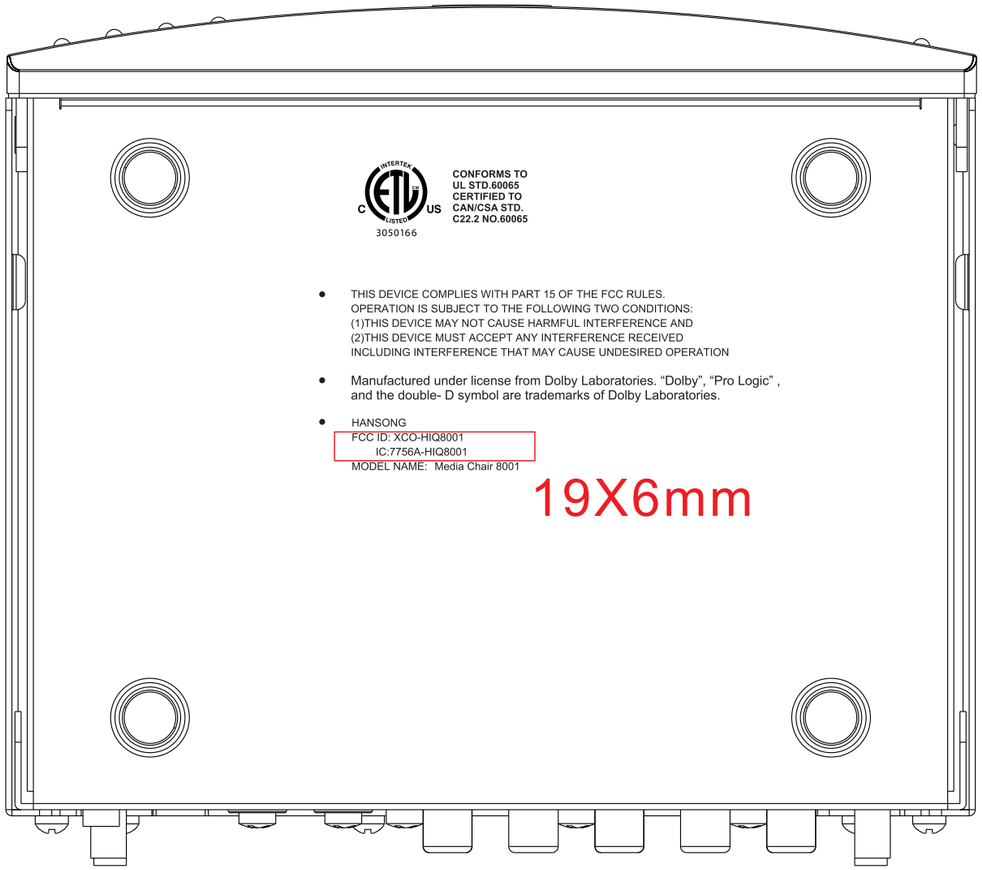

Media Chair 8001 Silkscreen

CONFORMS TO
UL STD.60065
CERTIFIED TO
CAN/CSA STD.
C22.2 NO.60065
3050166
THIS DEVICE COMPLIES WITH PART 15 OF THE FCC RULES.
OPERATION IS SUBJECT TO THE FOLLOWING TWO CONDITIONS:
(1)THIS DEVICE MAY NOT CAUSE HARMFUL INTERFERENCE AND
(2)THIS DEVICE MUST ACCEPT ANY INTERFERENCE RECEIVED
INCLUDING INTERFERENCE THAT MAY CAUSE UNDESIRED OPERATION
Manufactured under license from Dolby Laboratories. "Dolby", "Pro Logic",
and the double- D symbol are trademarks of Dolby Laboratories.
HANSONG
FCC ID: XCO-HIQ8001
IC: 7756A-HIQ8001
MODEL NAME: Media Chair 8001

CONFORMS TO
UL STD.60065
CERTIFIED TO
CAN/CSA STD.
C22.2 NO.60065
3050166
THIS DEVICE COMPLIES WITH PART 15 OF THE FCC RULES.
OPERATION IS SUBJECT TO THE FOLLOWING TWO CONDITIONS:
(1)THIS DEVICE MAY NOT CAUSE HARMFUL INTERFERENCE AND
(2)THIS DEVICE MUST ACCEPT ANY INTERFERENCE RECEIVED
INCLUDING INTERFERENCE THAT MAY CAUSE UNDESIRED OPERATION
Manufactured under license from Dolby Laboratories. "Dolby", "Pro Logic",
and the double- D symbol are trademarks of Dolby Laboratories.
HANSONG
FCC ID: XCO-HIQ8001
IC: 7756A-HIQ8001
MODEL NAME: Media Chair 8001