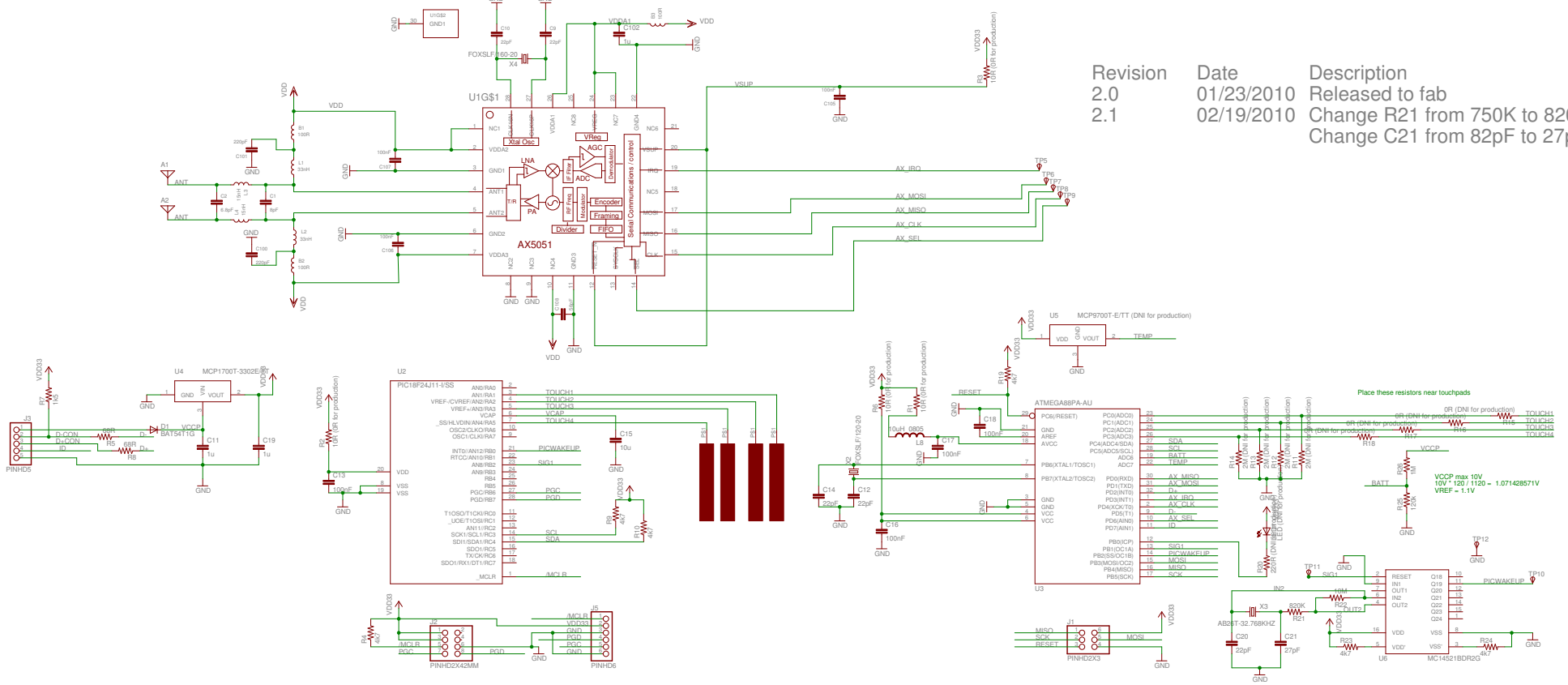Revision	Date	Description
2.0	01/23/2010	Released to fab
2.1	02/19/2010	Change R21 from 750K to 820K
		Change C21 from 82pF to 27pF