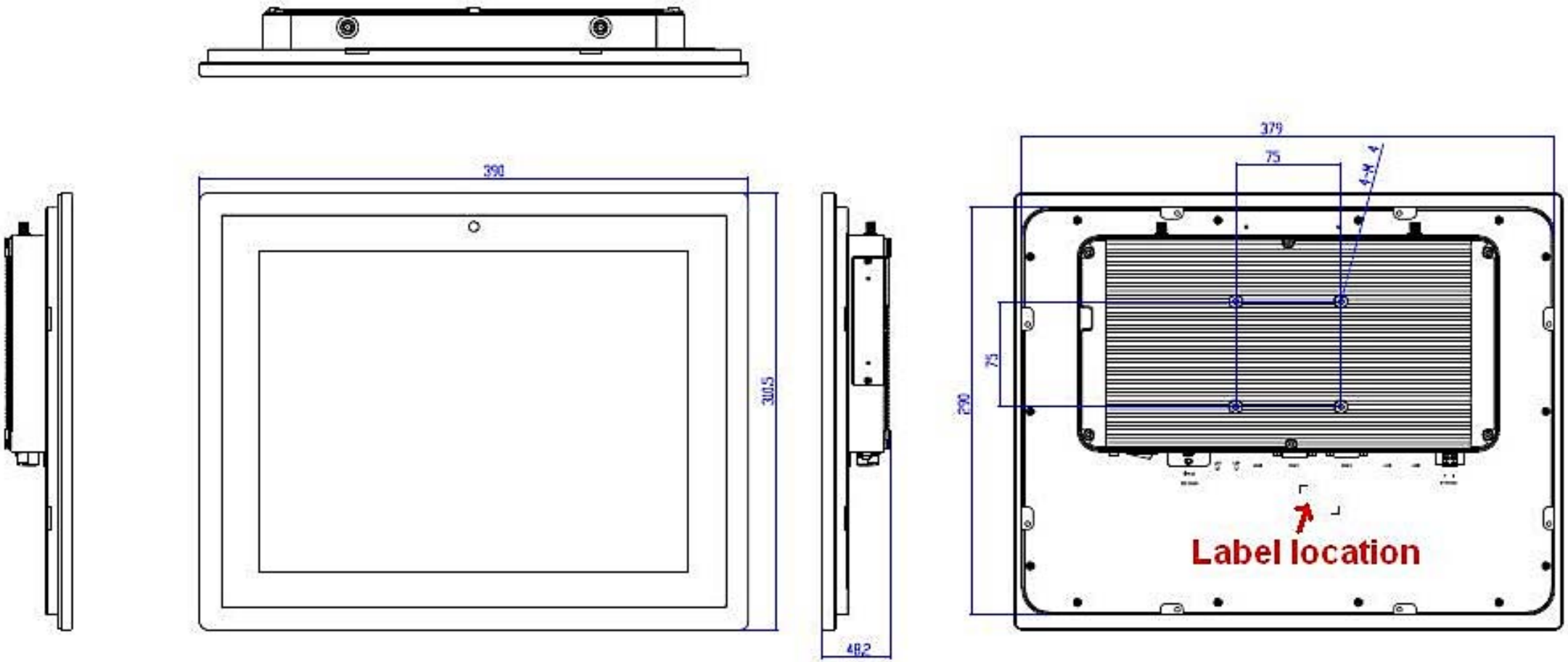
390
301,5
48,2
379
75
4-M 4
75
290
Label location

28mm

20mm

ADLINK
TECHNOLOGY INC.

P/N : Smart Touch Computer
M/N : STC-1505
Rating : 9-24V ⎓ 4.66-1.75A
or 19V ⎓ 3.42A
FCC ID : X4D-STC-1505
This device complies with Part 15 of the FCC Rules.
Operation is subject to the following two conditions:
(1) this device may not cause harmful interference,
and (2) this device must accept any interference
received, including interference that may cause
undesired operation.

Made in China

4-R2

Pantone Black 7C

Pantone Cool Gray 1C

Adhesive:3M 467