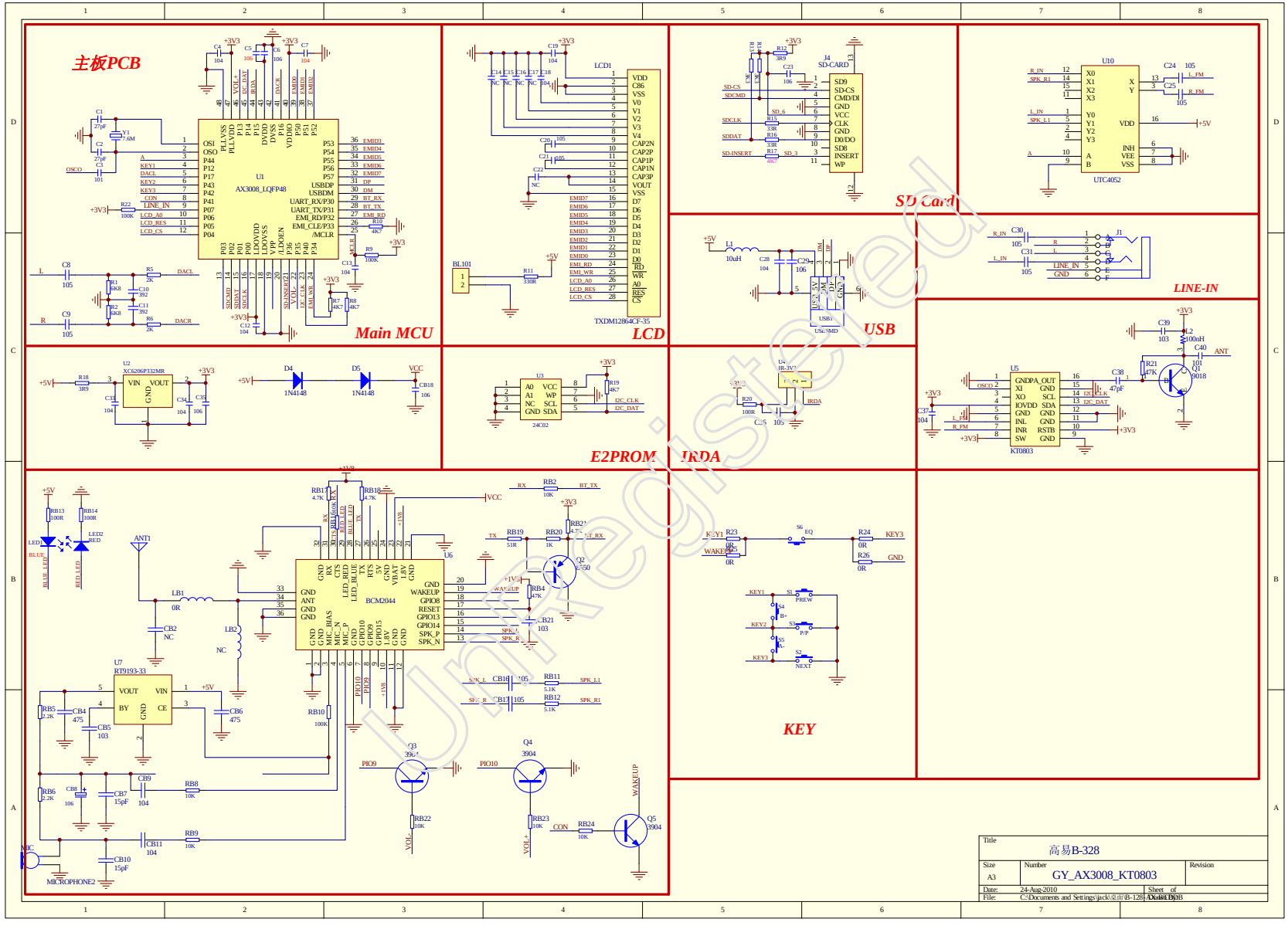
主板PCB
Main MCU
U1
AX3008_LQFP48
LCD
LCD1
TXDM12864CF-35
SD Card
J4
SD-CARD
USB
LINE-IN
J1
E2PROM
24C02
IRDA
KEY
S1 PREW
S2 NEXT
S3 P/P
S4 B+
S5 B-
S6 EQ
BCM2044
U6
U7
RT9193-33
MICROPHONE2
U10
UTC4052
U5
KT0803
Q1 9018
Q2 9550
Q3 3904
Q4 3904
Q5 3904
Title
高易B-328
Size
A3
Number
GY_AX3008_KT0803
Revision
Date: 24-Aug-2010
Sheet of
File: C:\Documents and Settings\jack\桌面\B-128.DDB
Created with PCB Artist
Unregistered

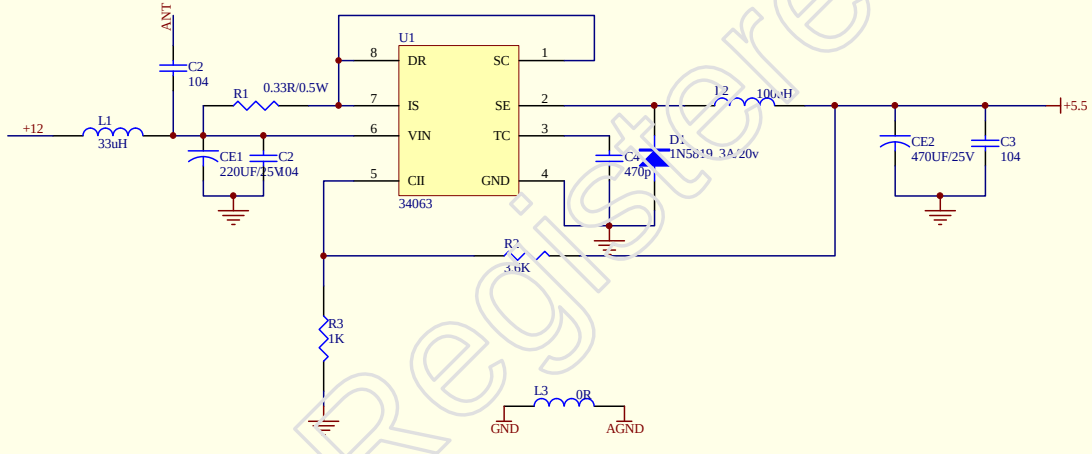

UnRegistered

Title		
Size A4	Number	Revision
Date: 25-Aug-2010	Sheet of	
File: E:\公司资料\旧资料\公司资料\OTI方案资料\此电源板PCB.Ddb	Drawn By:	