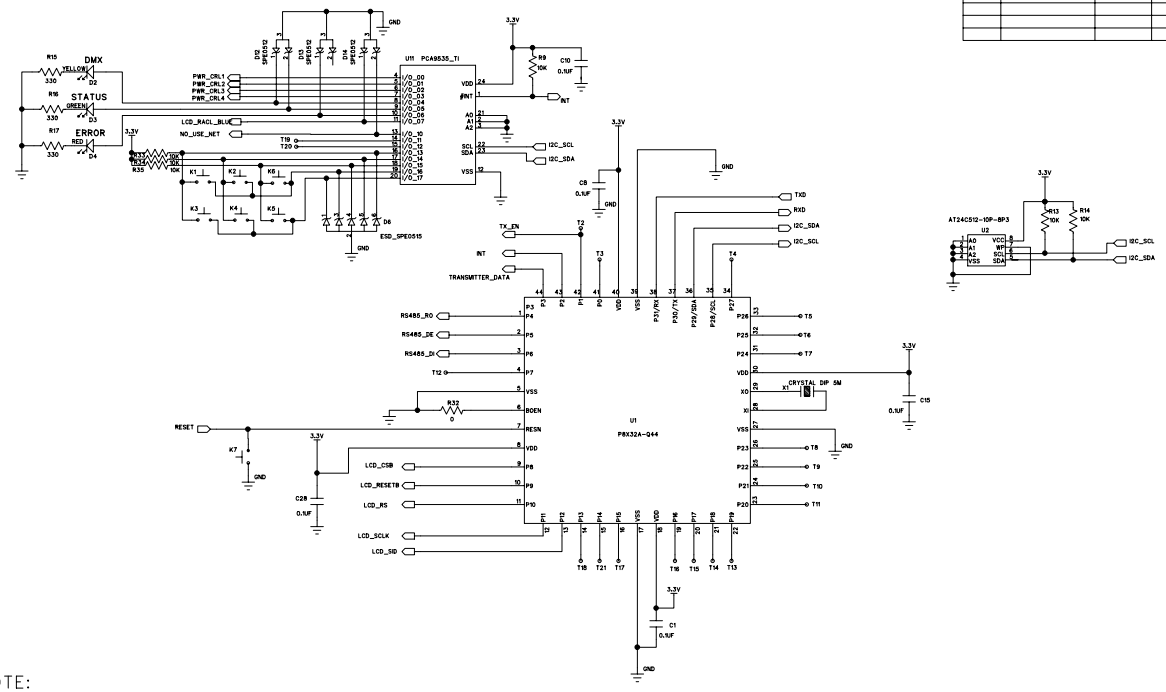

NOTE:

1. K1: Soft button left
2. K2: Soft button right
3. K3: Up button
4. K4: Left button
5. K5: Down button
6. K6: Right button

REVISION RECORD			
LTR	ECO NO:	APPROVED:	DATE:

DRAWN: Dragon	DATED: August/28/2008	COMPANY: DREXHILL TECHNOLOGY CORP	
CHECKED:	DATED:	TITLE: MCU CONTROL	
APPROVED:	DATED:	CODE:	SIZE: A4 / DRAWING NO: / REV: V5
		SCALE:	SHEET: 2 OF 6

REVISION RECORD			
LTR	ECO NO:	APPROVED:	DATE:

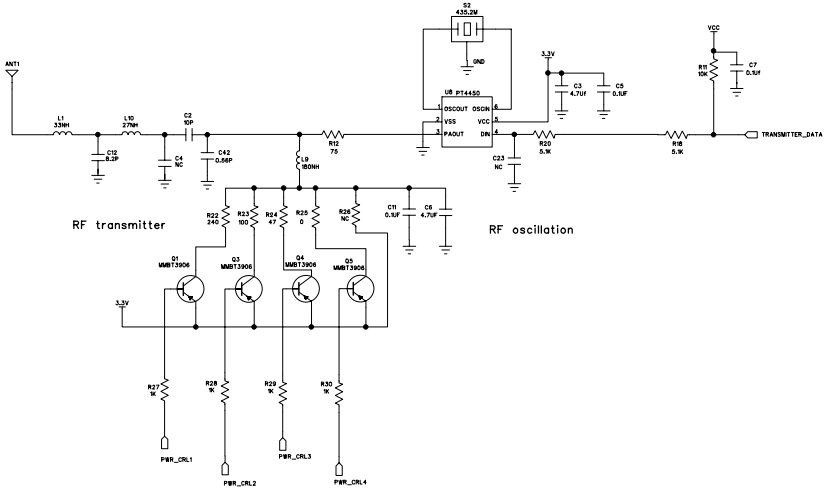

PWR_CRL1	CRL2	CRL3	CRL4	power level	note
1	1	1	0	level1	MAX
1	1	0	1	level2	
1	0	1	1	level3	
0	1	1	1	level4	MIN

COMPANY: DREXHILL TECHNOLOGY CORP				
TITLE: BASE_Transmitter				
DRAWN: Dragon	DATED: August/28/2008	CODE:	SIZE: A4	DRAWING NO:	REV: V5
CHECKED:	DATED:			
APPROVED:	DATED:			
		SCALE:	SHEET: 4 OF 6	

REVISION RECORD			
LTR	ECO NO:	APPROVED:	DATE:

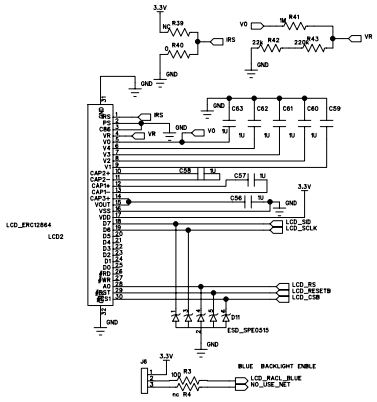

LCD_BACKLIGHT_CIRCUIT

COMPANY: DREXHILL TECHNOLOGY CORP				
TITLE: LCD				
DRAWN: Dragon	DATED: August/28/2008	CODE:	SIZE: A4	DRAWING NO:	REV: V5
CHECKED:	DATED:				
APPROVED:	DATED:				
		SCALE:		SHEET: 5 OF 6	

REVISION RECORD			
LTR	ECO NO:	APPROVED:	DATE:

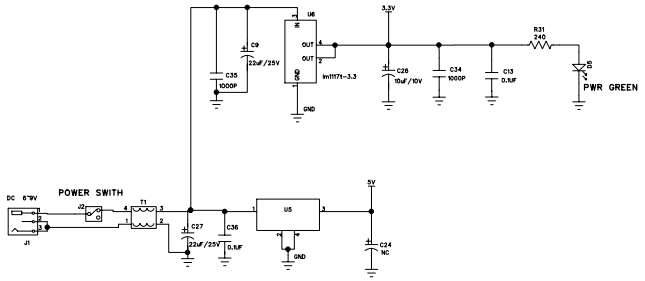

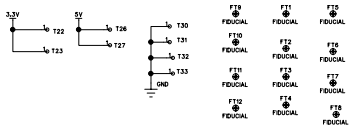

DRAWN: Dragon	DATED: August/28/2008	COMPANY: DREXHILL TECHNOLOGY CORP	
CHECKED:	DATED:	TITLE: POWER SUPPLY	
APPROVED:	DATED:	CODE: / SIZE: A4 / DRAWING NO:	REV: V5
		SCALE:	SHEET: 6 OF 6