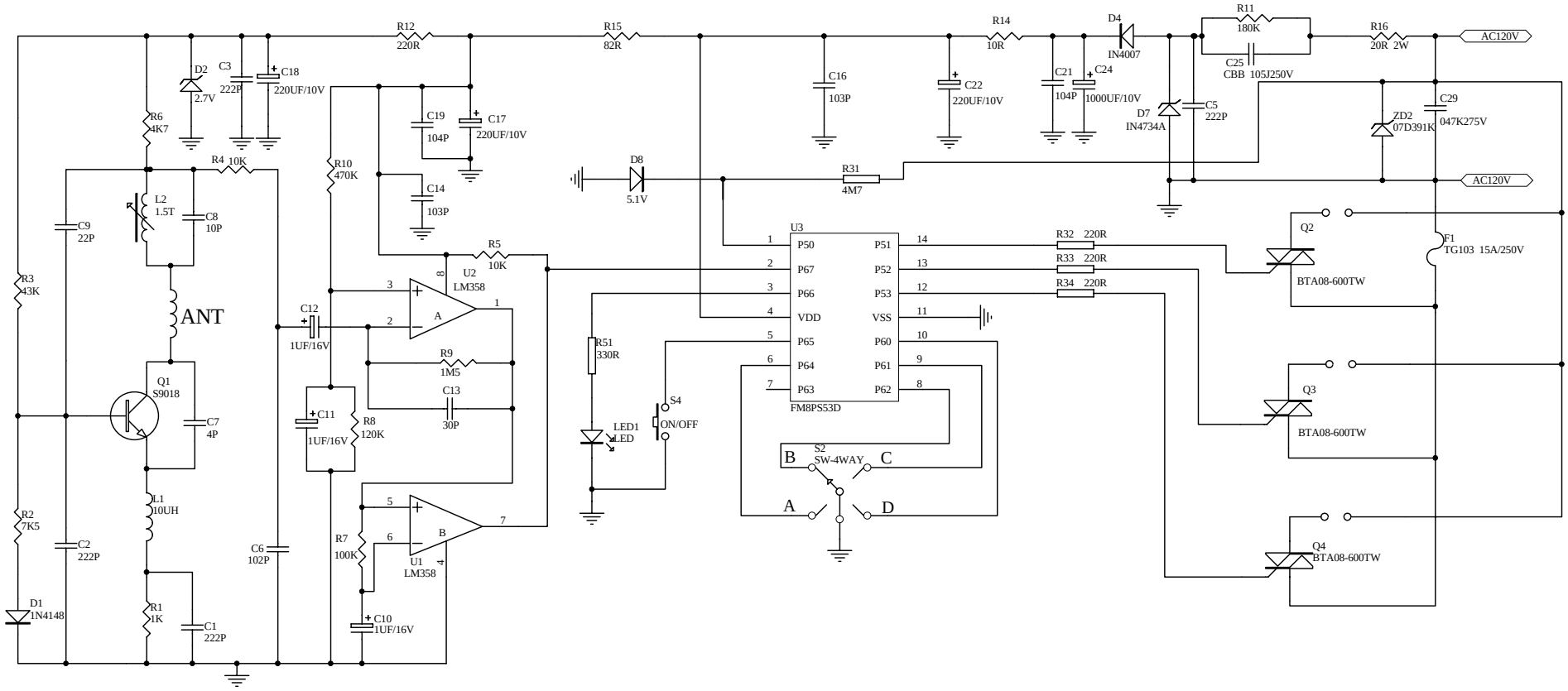

Shezhen Aodee Electron Co. ,Ltd		PRODUCT NAME	CONTROL SWITCH AR255		
		SCH NO.	AR255V1.0		
MATERIAL	94VO 1.6MM	PAGE	1 OF 1	UNIT	MM
DRAWED BY	HUAMING YANG	CHECKED BY	HUAMING YANG	APPROVED BY	GUOHUA HUANG