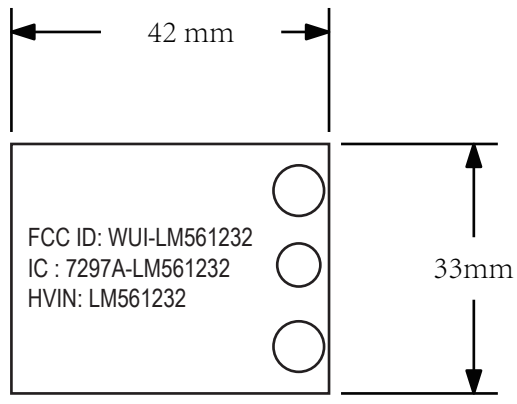
42 mm
FCC ID: WUI-LM561232
IC : 7297A-LM561232
HVIN: LM561232
33mm