REV	ECR/ECO	DESCRIPTION
000	--	DRAWING INITIATED 2014-08-27

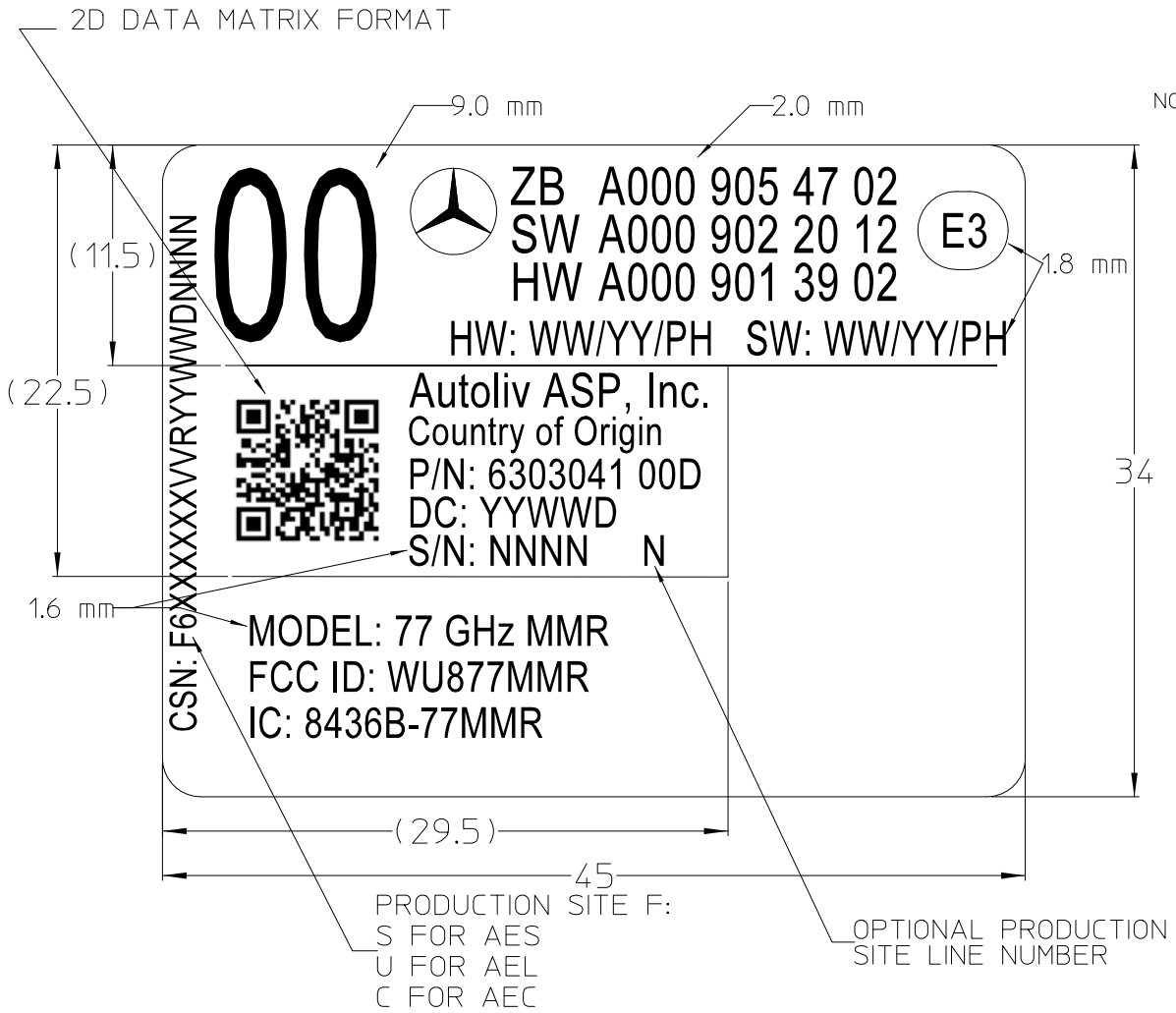

NOTES:

1. MATERIAL: WHITE POLYSTER 622657900A OR EQUIVALENT
2. COLOR: ALL PRINT TO BE BLACK
3. 2D DATA MATRIX CONTAINS CUSTOMER SERIAL NUMBER CSN, CUSTOMER P/N AND QUALITY LEVEL. EACH NUMBER FIELD SEPARATED BY A SEMI-COLON ';'.
4. LEGENDS:
   CUSTOMER P/N = ZB NUMBER (INCLUDE SPACES)
   QUALITY LEVEL = QN OR EN DEFINED BY CUSTOMER
   P/N: 6XXXXXXVVR
   Date Code: YYWWD
   S/N: NNNN

   YY = LAST TWO DIGITS OF CALENDAR YEAR
   WW = CALENDAR WEEK
   D = DAY
   NNNN = UNIT SERIAL NUMBER

INFORMATION FOR THE ABOVE PARTS SHOWN ON THIS DRAWING

© AUTOLIV INC 2001. THIS DOCUMENT AND THE DATA DISCLOSED HEREIN OR HEREWITH IS PROPRIETARY AND MAY NOT BE REPRODUCED, USED OR DISCLOSED IN WHOLE OR IN PART WITHOUT WRITTEN PERMISSION FROM AUTOLIV INC.

PROD. CHARACTERISTICS CLASSIFICATION: AS 52

CHARACTERISTIC	SYMBOLS
CRITICAL	[CC] OR .../CC
SIGNIFICANT	[SC] OR .../SC

GEOMETRICAL TOLERANCING STANDARD: ASME Y14.5M 1994

SUPPLIER QUALITY SYSTEM REQUIREMENTS: ASM

Autoliv

Autoliv Electronics America
Lowell Facility
1011B Pawtucket Blvd
Lowell, MA 01853-3295

PROJECTION: DO NOT SCALE

GENERAL TOL. DWG .XX ± 0.3 mm | GENERAL TOL. 3D MODEL ± 0.2 mm | DIM.UNIT mm | MASS

MATERIAL [CC] ACC TO AS 5: SEE NOTES | SCALE

CUSTOMER REFERENCE: X | DWG SIZE: A3

TITLE (LOCAL): X | SYSTEM: COCREATE

TITLE (ENGLISH): LABEL, PRINTED, 77 GHz MMR | SHEET: 1 OF 1

TRACEABILITY CLASSIFICATION AS 4: 2 | 3D MODEL: NO | DRAWING NO: E1591839 | REVISION: 000

ADDITIONAL INFORMATION ABOUT APPROVAL

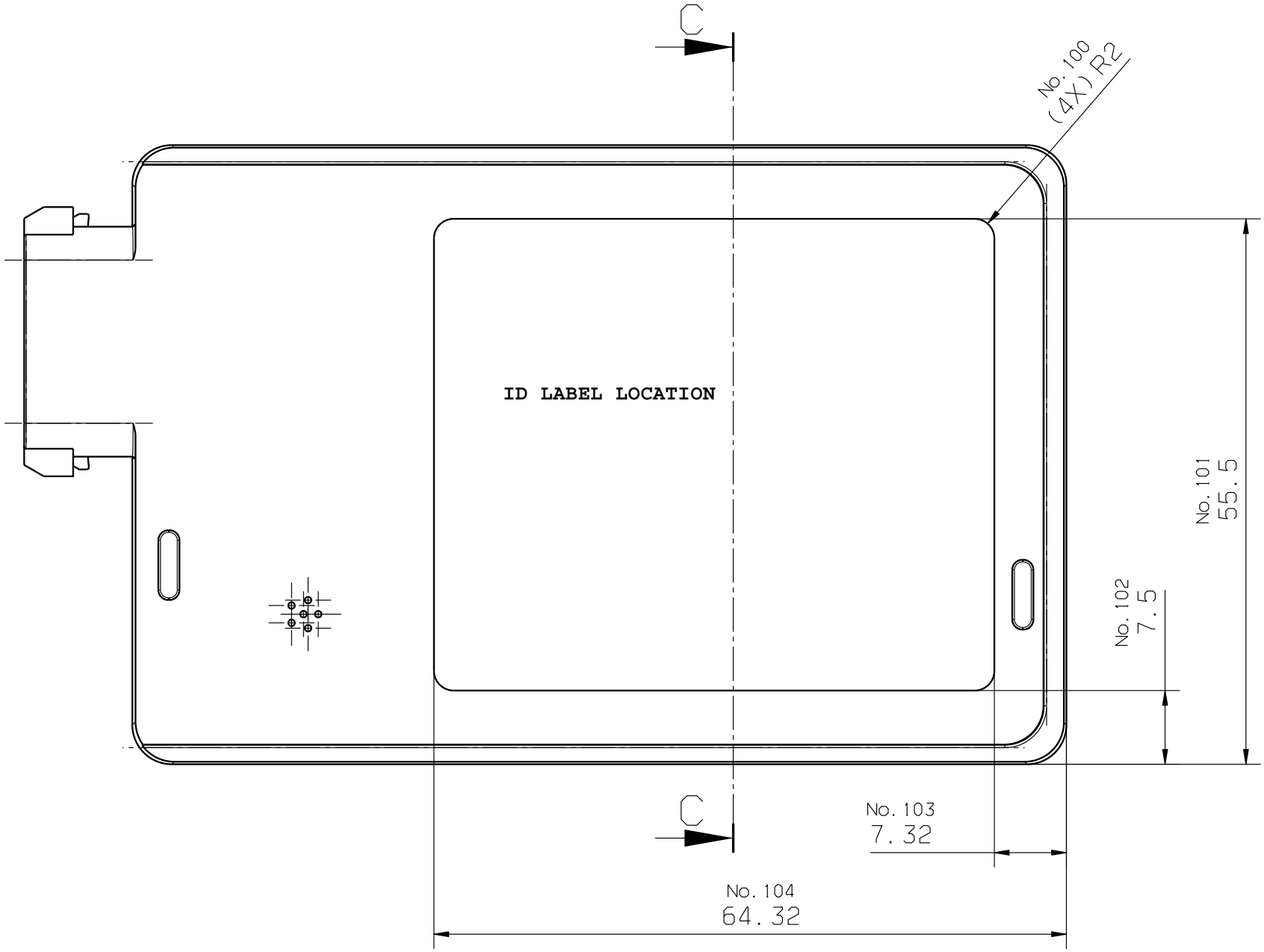

Front view	
VIEW No. 1	No. 100 - No. 104
DEL No.	