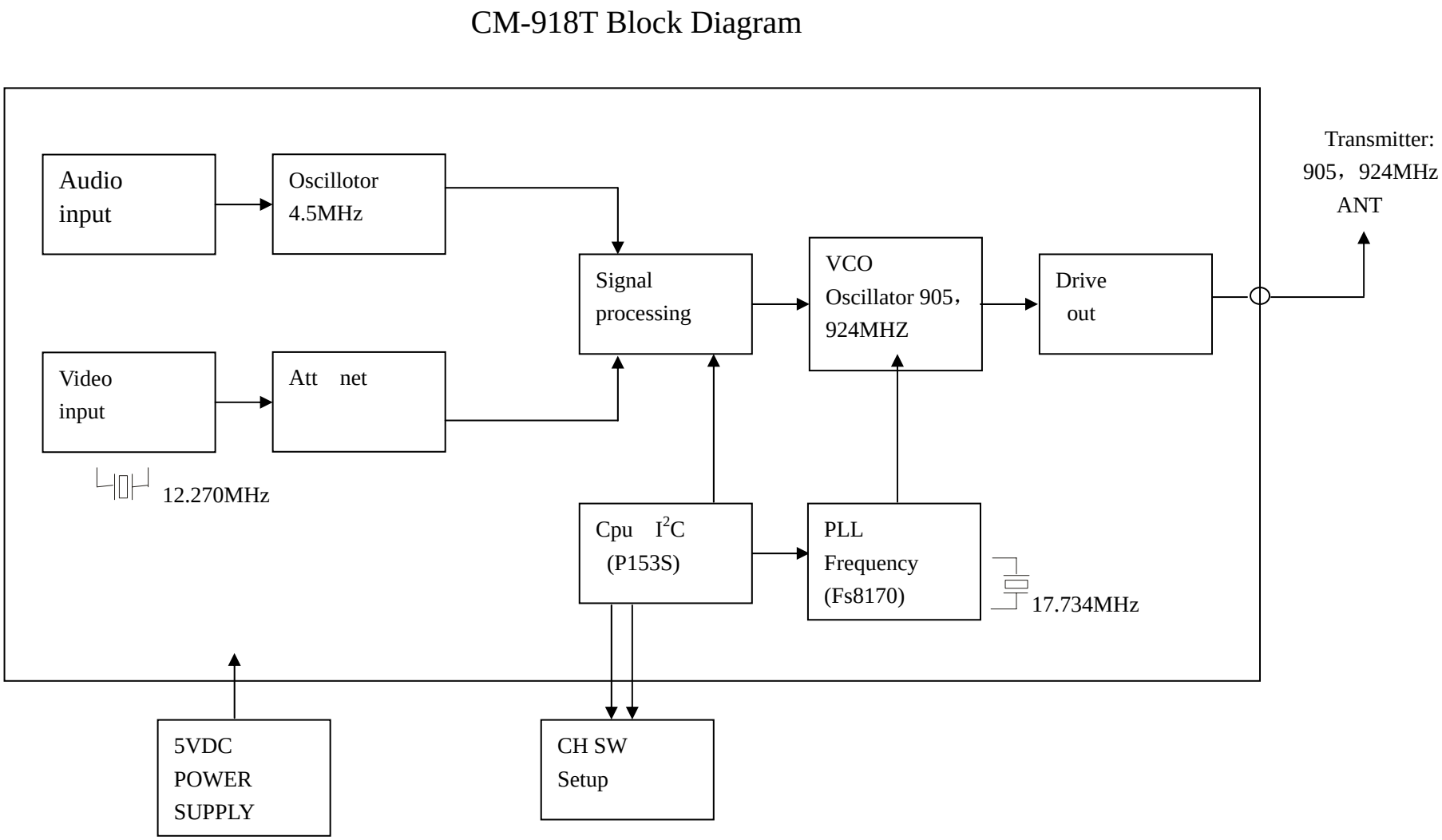0.9GHz Transmitter block diagram