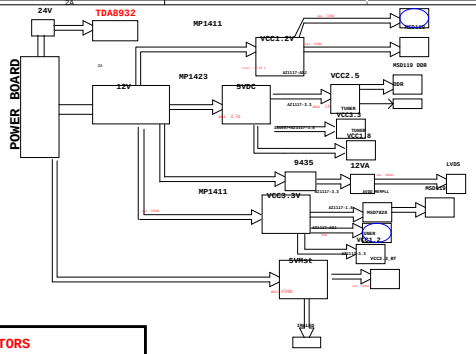

POWER SUPPLY:5V STANDBY, 12V FOR MAIN BOARD, 24V FOR INVERTER & AUDIO AMPLIFIER

12V → REGULATORS (2.5V, 1.8V, 3,3V, 5V)

24V → INVERTER → CCFL BACKLIGHT

module (IPTV DVD ...)

component1 → VIDEO SWITCH FSAV330

VGA → VIDEO SWITCH FSAV330

H , V SYNC

MODU CVBS

PANEL

LVDS DRIVER

VIDEO SWITCH AND DECODER MSD119 MPEG2 DECODER

composite

S_VIDEO

TV-CVBS

HDMI RECEIVER

AV OUT → CVBS BUFFER FMS6143 → AV OUT, PVR MODU(OPTION)

SIF

TS OUT → TS IN → DIGITAL IF DEMODULATOR S5H1411 → DIF → TUNER

MEMORY 16MBit FLASH & 256MBit DDR1

HDMI SWITCH PI3HDMI1212 ← HDMI1, HDMI2, MSD7828

I2C

4052-OUT

VGA

composite/S-VIDEO

FM RADIO

AUDIO OUT

MEGA16: MTI DECODER, ZENITH PHILIPS RCA DECODER, CCI DECODER

RJ45 MTI

DSUB9 USED FOR MEGA16 UPDATE FIRMWARE

RJ45 CCI

module → AUDIO SWITCH DUAL 4-CHANNEL DEMUX CD4052 1PC

component → AUDIO SWITCH DUAL 4-CHANNEL DEMUX CD4052 1PC

TV → AUDIO SWITCH DUAL 4-CHANNEL DEMUX CD4052 1PC

AUDIO CLASS-D AMPLIFIER TDA8932 2*5W

CLASS-AB AMPLIFIER TDA1517 5W(MAX) → PILLOW SPEAKER