Total
3.3V(mW) 1331.55 400mA
1.2V(mW) 924 770mA
1.8V(mW) 125.28 70mA
Total(mW) 2380.83
注

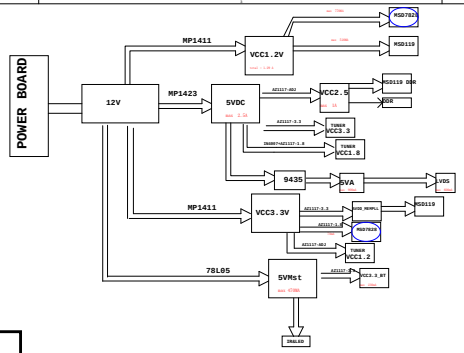

POWER SUPPLY:5V STANDBY, 12V FOR MAIN BOARD, 24V FOR INVERTER & AUDIO AMPLIFIER

12V → REGULATORS (2.5V, 1.8V, 3,3V, 5V)

24V → INVERTER → CCFL BACKLIGHT

module (IPTV DVD ...)

component → VIDEO SWITCH FSAV330

VGA → VIDEO SWITCH FSAV330

H , V SYNC

MODU CVBS

PANEL

LVDS DRIVER

VIDEO SWITCH AND DECODER

MSD119 MPEG2 DECODER

composite

S_VIDEO

TV-CVBS

CVBS BUFFER FMS6143

AV OUT

AV OUT

PVR MODU(OPTION)

SIF

TS OUT

Pro:Idiom

TS IN

DIGITAL IF DEMODULATOR S5H1411

DIF

TUNER

MEMORY 16MBit FLASH & 256MBit DDR1

HDMI RECEIVER

HDMI

I2C

4052-OUT

VGA

composite/S-VIDEO

FM RADIO

AUDIO OUT

MEGA16

MTI DECODER

ZENITH PHILIPS RCA DECODER

CCI DECODER

RJ45 MTI

DSUB9 USED FOR MEGA16 UPDATE FIRMWARE

RJ45 CCI

module →

component →

TV →

AUDIO SWITCH DUAL 4-CHANNEL DEMUX CD4052 1PC

AUDIO CLASS-AB AMPLIFIER TDA1517 2*3W

CLASS-AB AMPLIFIER TDA1517 5W(MAX)

PILLOW SPEAKER