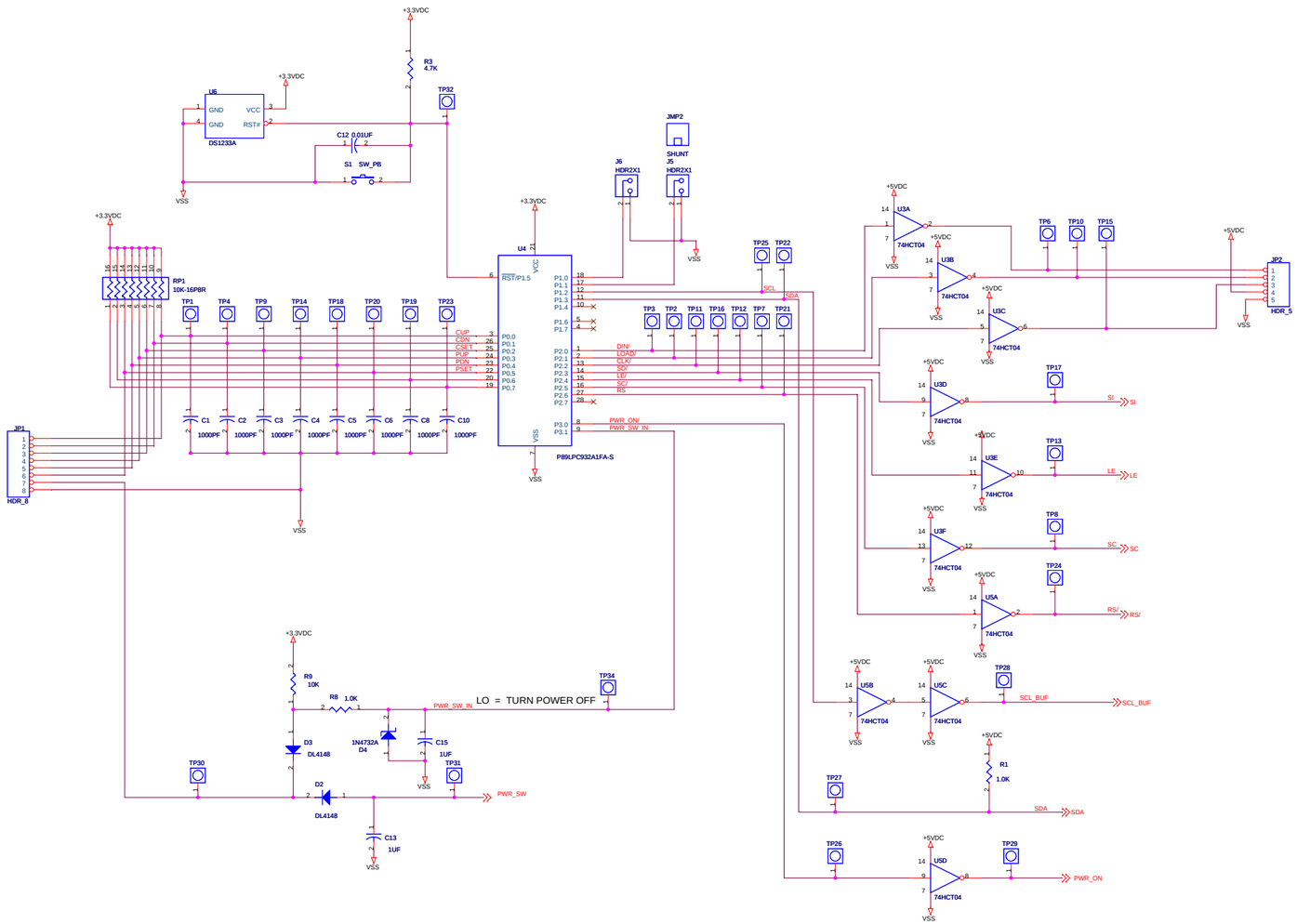

Electronic Display Applications, Inc.
121 Witmer Rd., Horsham, PA 19044
Phone (215) 675-1700 Fax (215) 675-9755

Title	SL-1550-T90 2.4GHz Transmitter - MICRO	
Size D	Document Number SD-0122-01	Rev A
Date: Friday, June 27, 2008	Sheet 2 of 4	

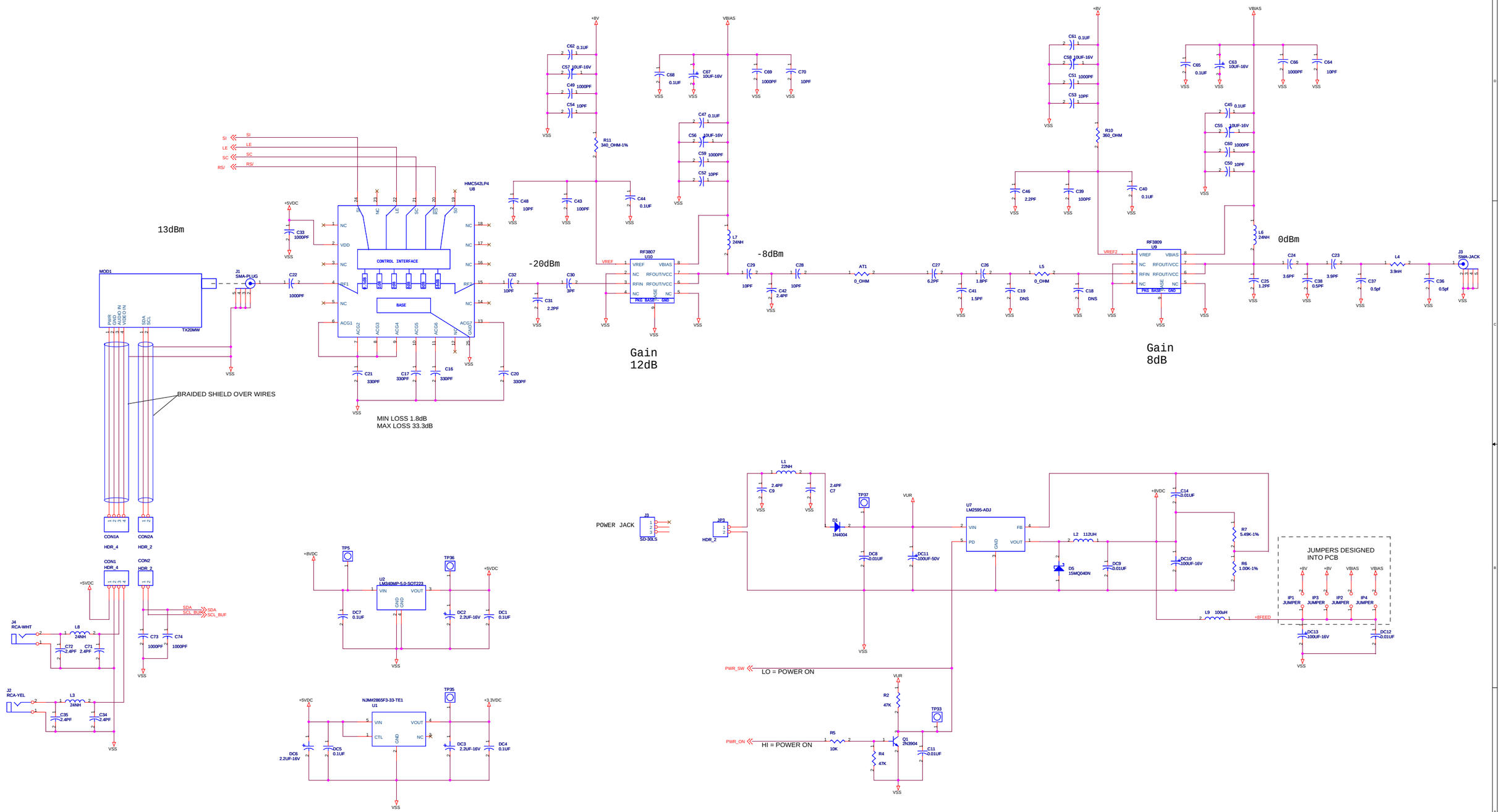

Electronic Display Applications, Inc.
121 Witmer Rd., Horsham, PA 19044
Phone (215) 675-1700 Fax (215) 675-9755

Title: SL-1550-T90 2.4GHz Transmitter - RF CIRCUITS

Size	Document Number	Rev
D	SD-0122-01	A

Date: Friday, June 27, 2008 Sheet 1 of 4

CHANNEL SELECTION

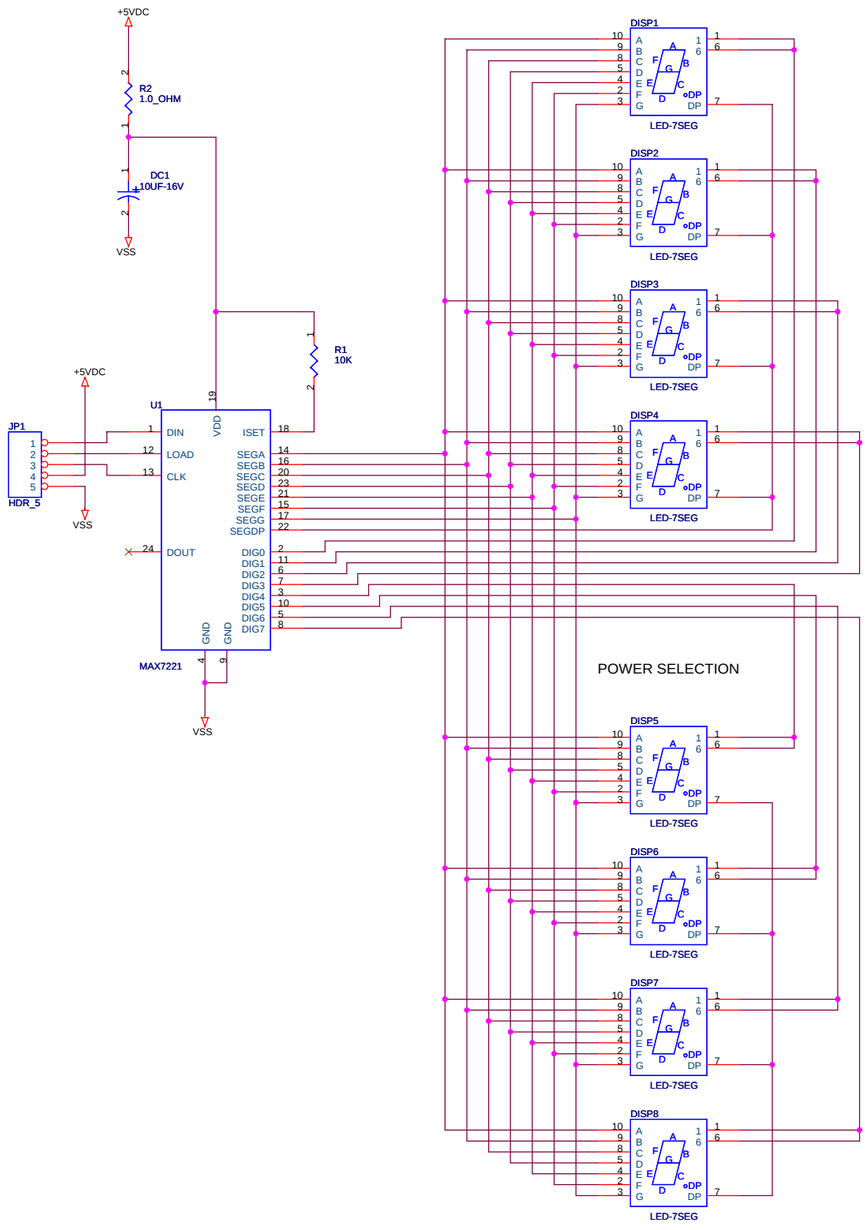

DISPLAY PCB

Electronic Display Applications, Inc.
121 Witmer Rd., Horsham, PA 19044
Phone (215) 675-1700 Fax (215) 675-9755

Title: SL-1550-T90 2.4GHz Transmitter - LED PCB

Size	Document Number	Rev
C	SD-0133-01	A

Date: Friday, June 27, 2008 Sheet 3 of 4

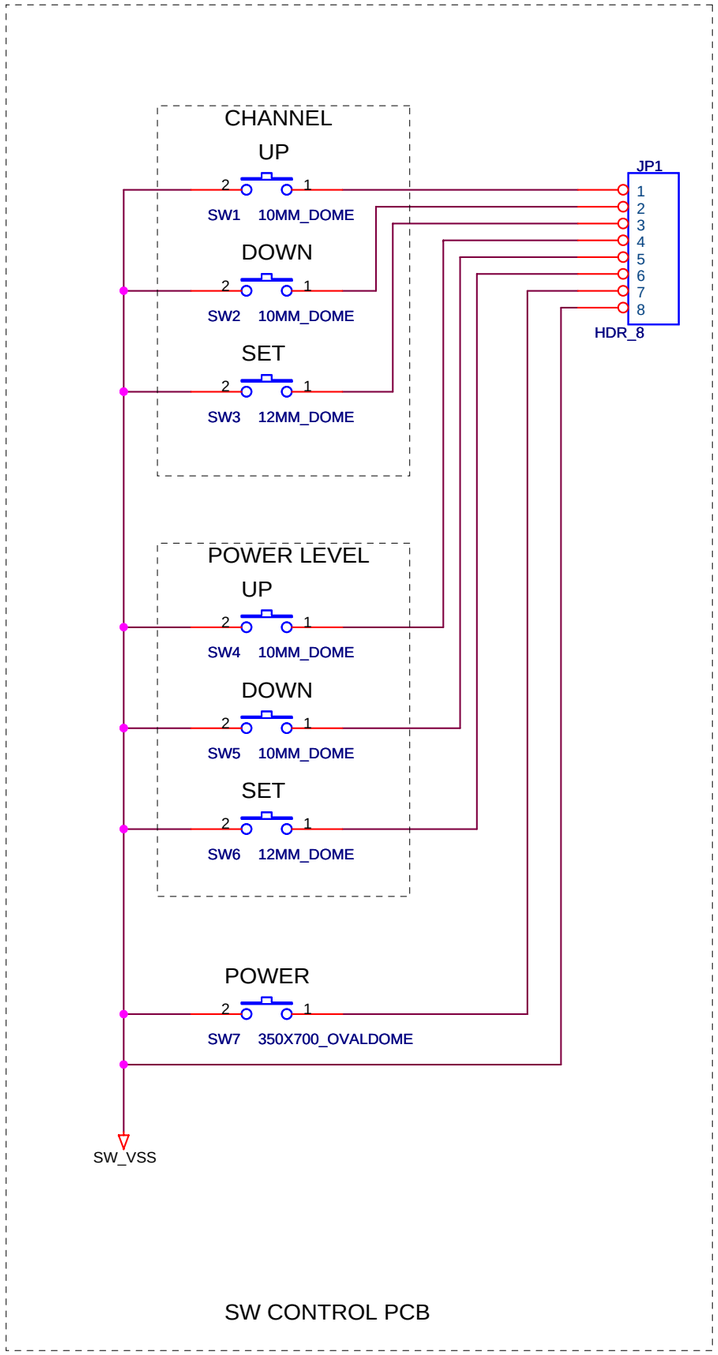

Electronic Display Applications, Inc.
121 Witmer Rd., Horsham, PA 19044
Phone (215) 675-1700 Fax (215) 675-9755

Title: SL-1550-T90 2.4GHz Transmitter - SWITCH PCB

Size	Document Number	Rev
B	SD-0134-01	A

Date: Friday, June 27, 2008 Sheet 4 of 4