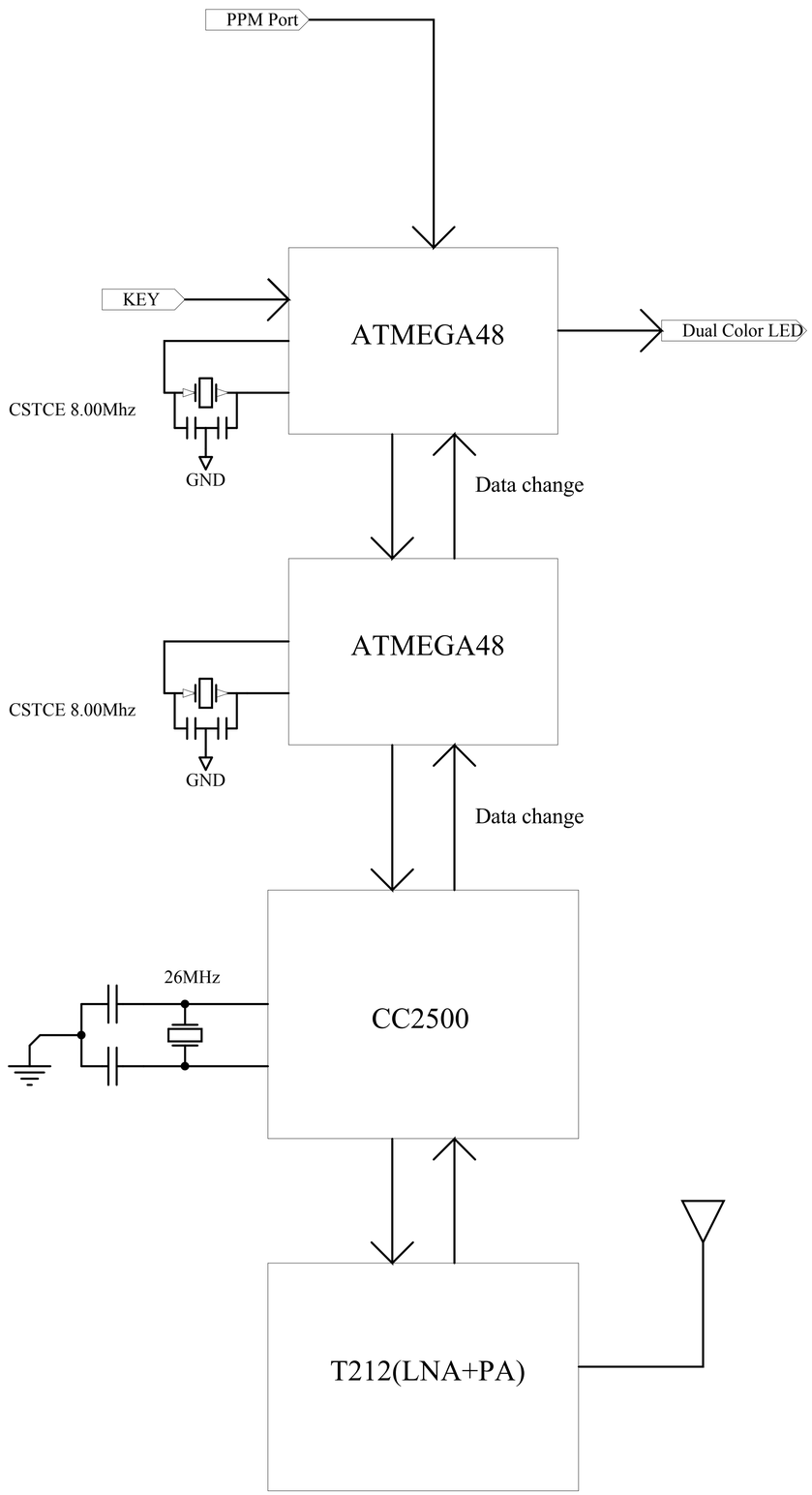

Title		
Size Letter	Number	Revision
Date: 2008-9-17		Sheet of
File: C:\Documents and Settings\..\Sheet1.Sch		Drawn By: