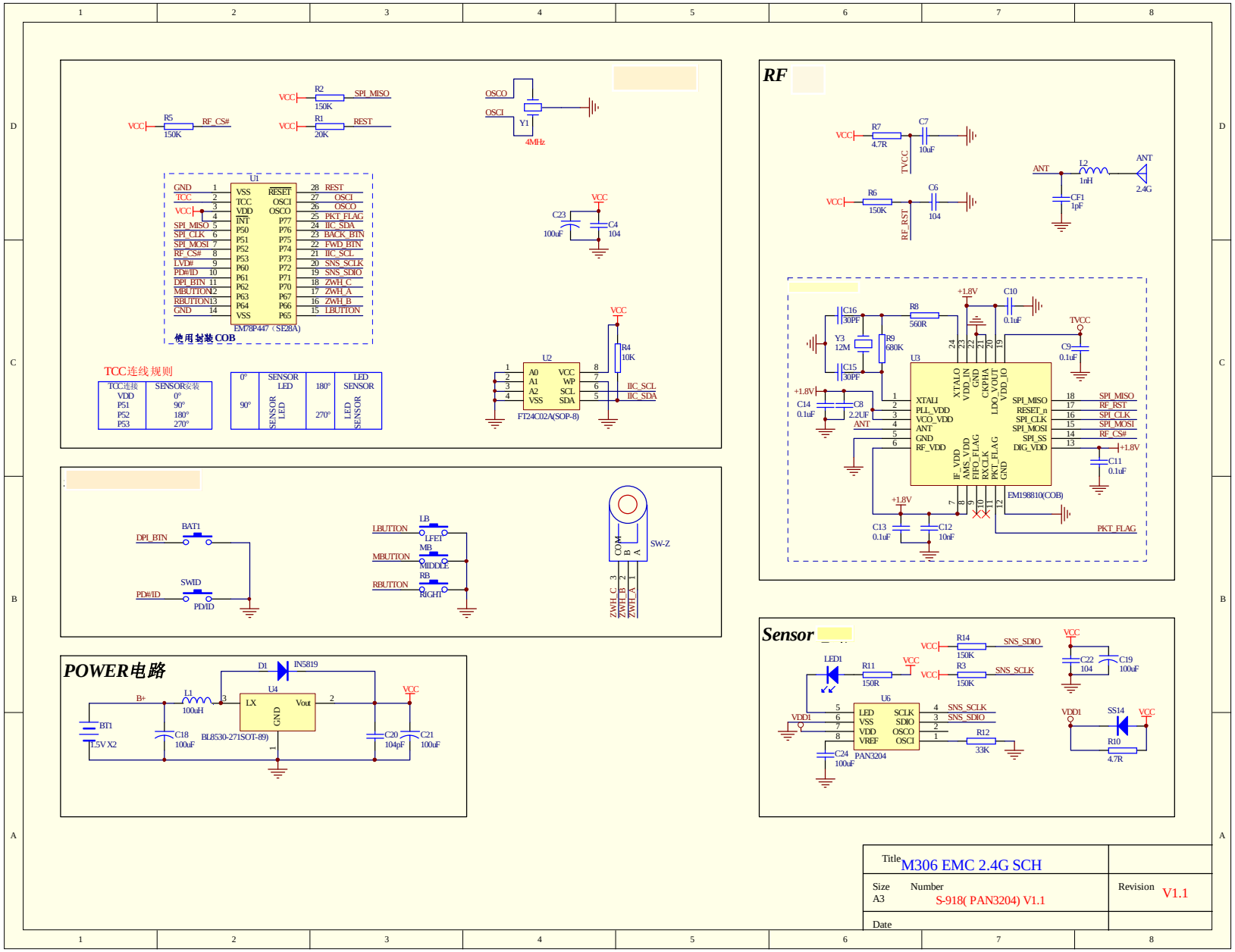Schematic Diagram