Schematic diagram

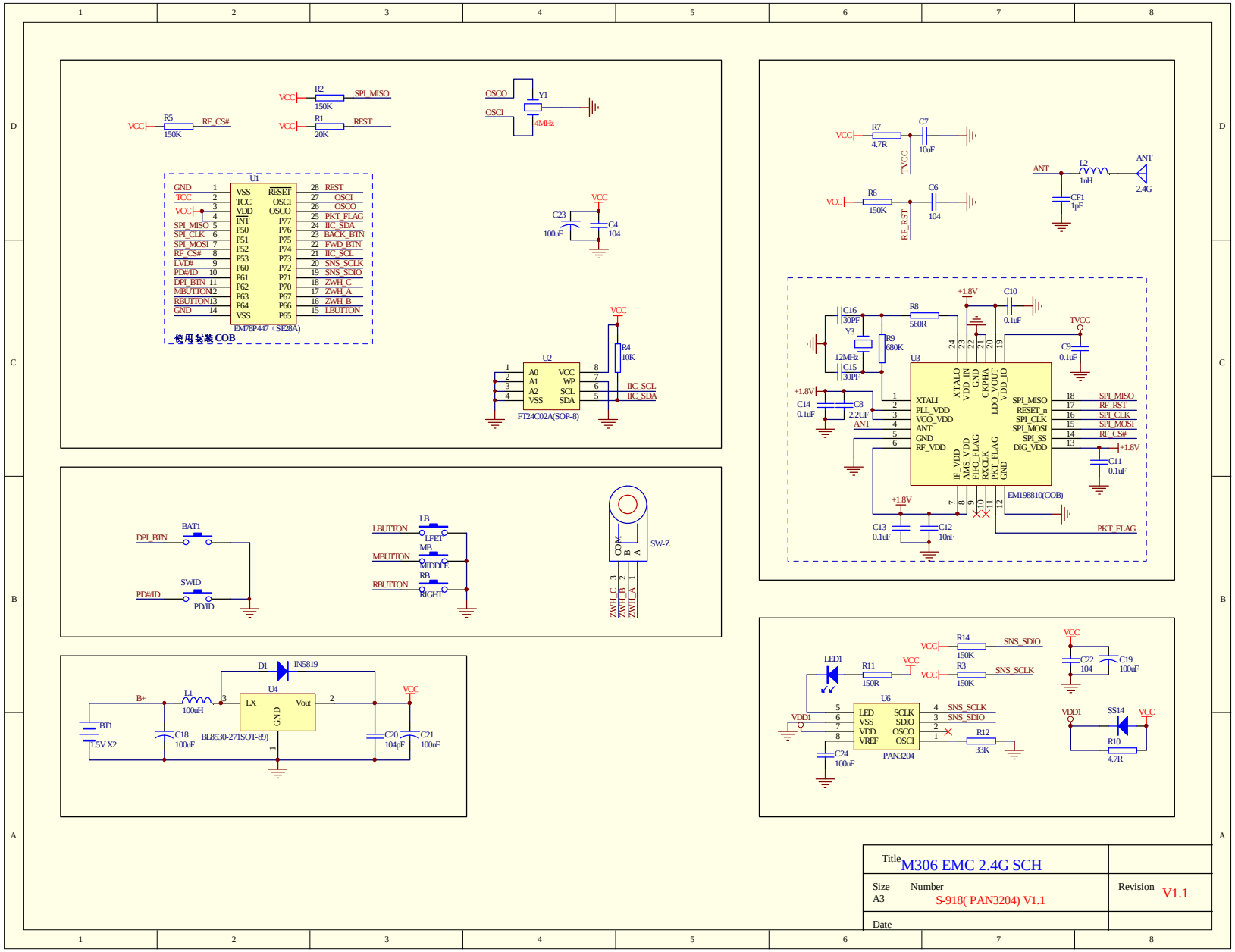

Title M306 EMC 2.4G SCH	
Size A3 / Number S-918(PAN3204) V1.1	Revision V1.1
Date	