INTRODUCTION

1. GENERAL DESCRIPTION

Model No	AIR WAVE P/N
	MA-96

Below is a table summarizing the antenna design specification.

1.2 Electrica Properties

Parameter	Description
Frequency Band	800/900/1800/1900/2100MHz
Nominal Impedance	50 ohm
Polarization	Vertical
Return Loss	Please See Data-1
V.S.W.R	2.0:1
Note: Gain includes the cable loss	

1.2 Mechanical Properties

Parameter	Description
Antenna Type	External Antenna
Touch Type	Screw Type
Connector Type	I-PEX
Antenna Dimensions	96 mm ± 3
Antenna Cable Total Length	500 mm ± 20
Antenna Color	Black
Operating Temperature Range	-20˚C~+60˚C
Storage Temperature Range	-30˚C~+70˚C

2. Appearance

NO.	Name	Finish	Q, TY
01	Antenna	Black	01
02	Base	Black	01
03	RG-178 + I-PEX		01

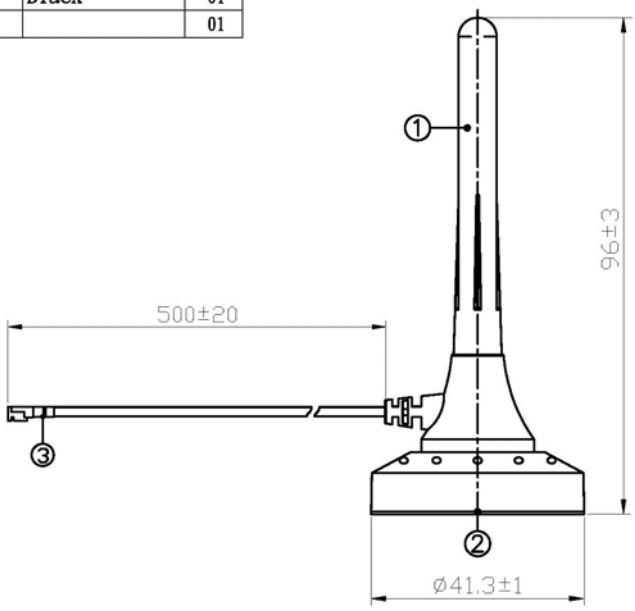

Third angle projection	CUSTOMER'S	MODEL	PARTS NUMBER	FREQUENCY	UNIT	SCALE	DATE	VERSION
				800/900/1800/1900/2100MHz	M/M		20090403	1
豪璿企業有限公司	TOLERANCE	X.XX±0.15	NAME	PARTS NUMBER	APPROVED	CHECKED	DRAWING	DESIGNED
	SURFACE ROUGHNESS	S	APPEARANCE					

3. Frequency

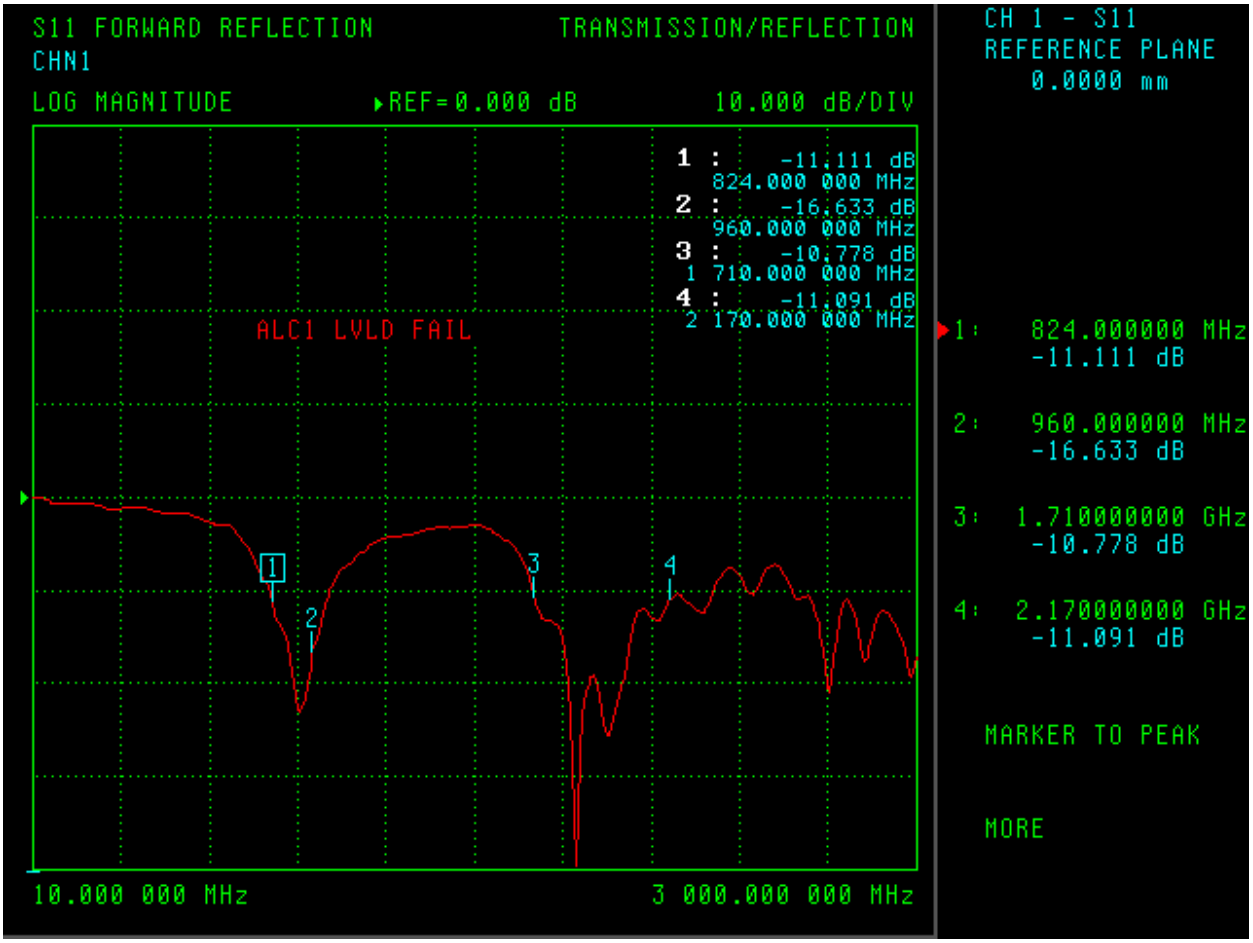
S11 FORWARD REFLECTION
TRANSMISSION/REFLECTION
CHN1
LOG MAGNITUDE
REF=0.000 dB
10.000 dB/DIV
1 : -11.111 dB
824.000 000 MHz
2 : -16.633 dB
960.000 000 MHz
3 : -10.778 dB
1 710.000 000 MHz
4 : -11.091 dB
2 170.000 000 MHz
ALC1 LVLD FAIL
10.000 000 MHz
3 000.000 000 MHz
CH 1 - S11
REFERENCE PLANE
0.0000 mm
1: 824.000000 MHz
-11.111 dB
2: 960.000000 MHz
-16.633 dB
3: 1.710000000 GHz
-10.778 dB
4: 2.170000000 GHz
-11.091 dB
MARKER TO PEAK
MORE

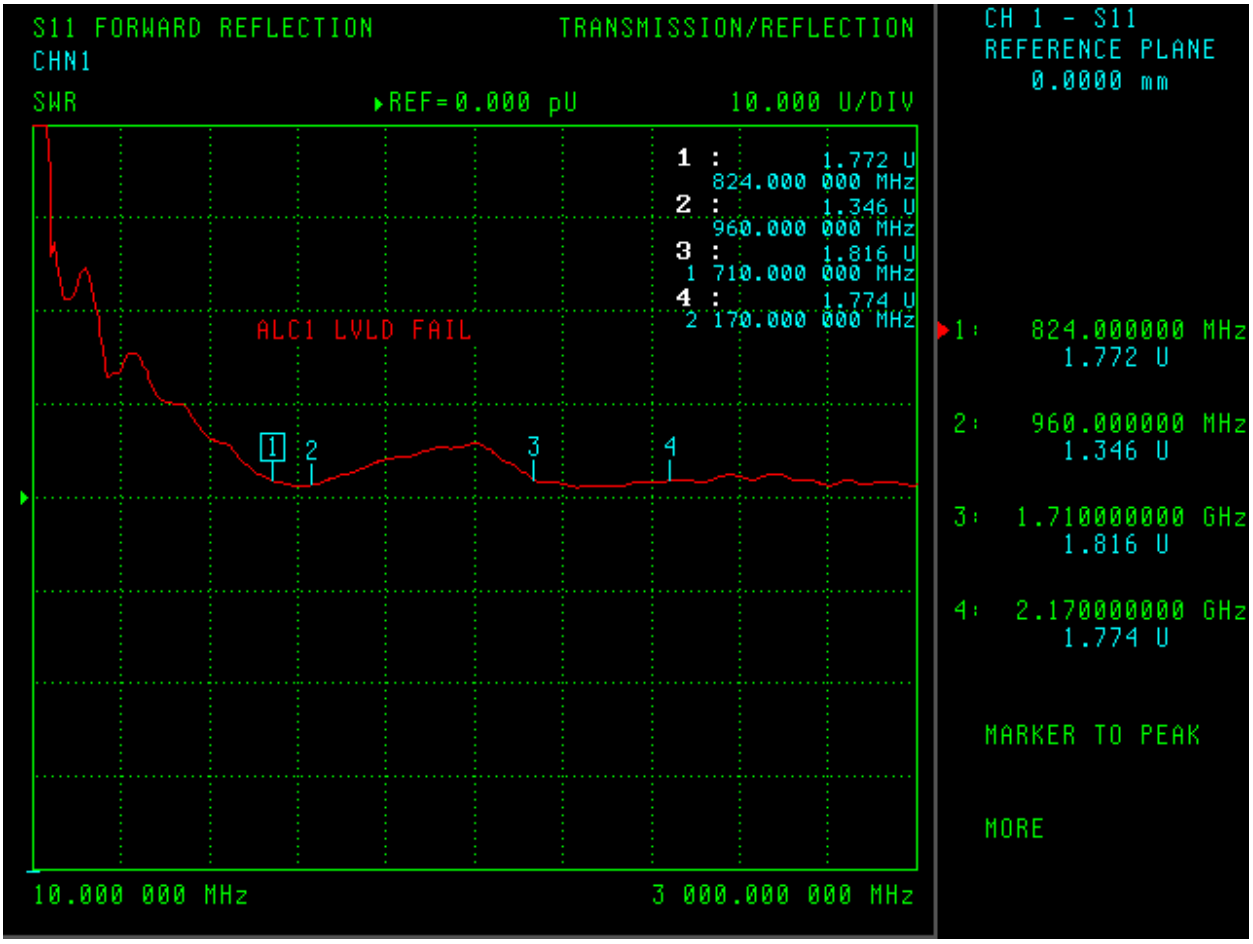
S11 FORWARD REFLECTION
TRANSMISSION/REFLECTION
CHN1
SWR
REF=0.000 pU
10.000 U/DIV
1 : 1.772 U
824.000 000 MHz
2 : 1.346 U
960.000 000 MHz
3 : 1.816 U
1 710.000 000 MHz
4 : 1.774 U
2 170.000 000 MHz
ALC1 LVLD FAIL
10.000 000 MHz
3 000.000 000 MHz
CH 1 - S11
REFERENCE PLANE
0.0000 mm
1: 824.000000 MHz
1.772 U
2: 960.000000 MHz
1.346 U
3: 1.710000000 GHz
1.816 U
4: 2.170000000 GHz
1.774 U
MARKER TO PEAK
MORE

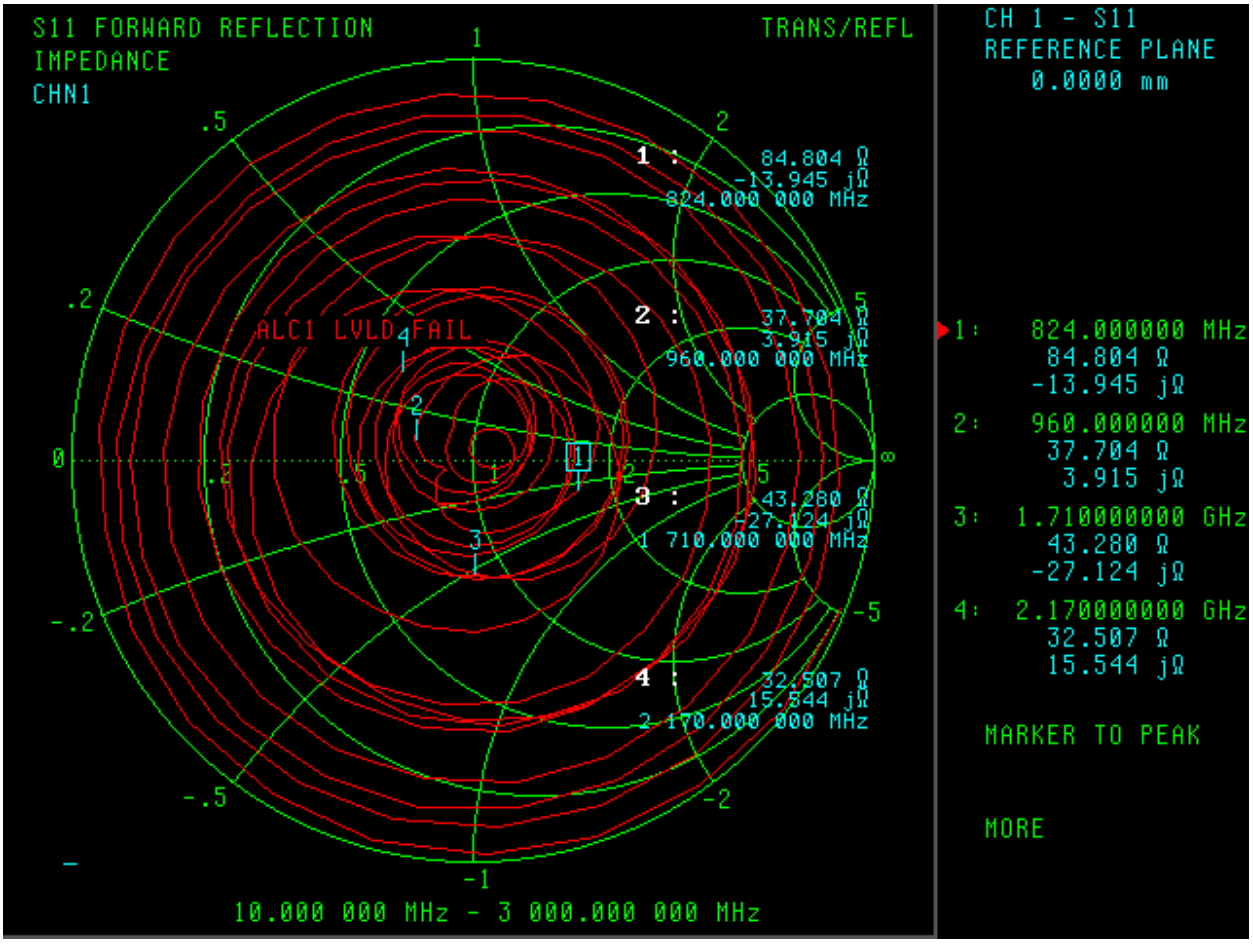
S11 FORWARD REFLECTION
IMPEDANCE
CHN1
TRANS/REFL
ALC1 LVLD FAIL
1 : 84.804 Ω
-13.945 jΩ
824.000 000 MHz
2 : 37.704 Ω
3.915 jΩ
960.000 000 MHz
3 : 43.280 Ω
-27.124 jΩ
1 710.000 000 MHz
4 : 32.507 Ω
15.544 jΩ
2 170.000 000 MHz
10.000 000 MHz - 3 000.000 000 MHz
CH 1 - S11
REFERENCE PLANE
0.0000 mm
1: 824.000000 MHz
84.804 Ω
-13.945 jΩ
2: 960.000000 MHz
37.704 Ω
3.915 jΩ
3: 1.710000000 GHz
43.280 Ω
-27.124 jΩ
4: 2.170000000 GHz
32.507 Ω
15.544 jΩ
MARKER TO PEAK
MORE

Test Date	2009/4/27																																													
Trade Name	ECS																																													
App.No	09-D0324-C																																													
Model Name	Antenna																																													
Test Mode	Free Space																																													
Free Space &Talking Position																																														
Communication System																																														
Frequency	824	830	835	836	840	849	860	865	869	870	875	880	885	894	900	915	920	925	940	960	1710	1750	1785	1805	1840	1850	1880	1910	1920	1930	1950	1960	1980	1990	2010	2018	2025	2110	2140	2170						
TC03 Note																																														
Ant. Port Input Pwr. (dBm)	0	0	0	0	0	0	0	0	0	0	0	0	0	0	0	0	0	0	0	0	0	0	0	0	0	0	0	0	0	0	0	0	0	0	0	0	0	0	0	0	0					
Tot. Rad. Pwr. (dBm)	-3.2844	-3.7008	-4.1055	-4.0772	-4.3718	-4.8555	-5.5486	-5.6096	-5.7613	-5.745	-5.8157	-5.7852	-5.5699	-5.0873	-4.8328	-4.1873	-3.898	-3.8573	-3.478	-2.8399	-5.8352	-4.2014	-3.4577	-3.01	-2.6207	-2.582	-2.141	-1.897	-1.9487	-2.0216	-2.1682	-2.0098	-1.8656	-1.9147	-2.2201	-2.3424	-2.4649	-2.763	-2.5212	-2.8639						
Peak EIRP (dBm)	1.7804	1.7278	1.4703	1.554	1.3443	0.9355	0.1994	-0.058	-0.3098	-0.3148	-0.5315	-0.6589	-0.5746	-0.293	-0.1601	0.1778	0.3681	0.345	0.6506	1.1964	-1.9306	-0.752	-0.2147	0.2313	0.7976	0.8448	1.5238	1.9256	2.1105	2.1649	2.2985	2.6738	2.9294	2.7728	2.4975	2.4039	2.2148	1.4825	1.5918	1.1988						
Directivity (dBi)	5.0647	5.4285	5.5758	5.6311	5.7161	5.791	5.658	5.5516	5.4515	5.4302	5.2841	5.1263	4.9952	4.7943	4.6727	4.3651	4.266	4.2023	4.1286	4.0363	3.9047	3.4494	3.2431	3.2413	3.4183	3.4268	3.6649	3.8225	4.0592	4.1864	4.4667	4.6835	4.795	4.6875	4.7176	4.7461	4.6797	4.2455	4.113	4.0626						
Efficiency (dB)	-3.2844	-3.7008	-4.1055	-4.0772	-4.3718	-4.8555	-5.5486	-5.6096	-5.7613	-5.745	-5.8157	-5.7852	-5.5699	-5.0873	-4.8328	-4.1873	-3.898	-3.8573	-3.478	-2.8399	-5.8352	-4.2014	-3.4577	-3.01	-2.6207	-2.582	-2.141	-1.897	-1.9487	-2.0216	-2.1682	-2.0098	-1.8656	-1.9147	-2.2201	-2.3424	-2.4649	-2.763	-2.5212	-2.8639						
Efficiency (%)	46.942	42.65	38.855	39.11	36.544	32.693	28.454	27.482	26.538	26.638	26.208	26.392	27.734	30.994	32.864	38.131	40.757	41.141	44.895	52.001	26.09	38.007	45.105	50.003	54.693	55.183	61.08	64.611	63.846	62.783	60.699	62.954	65.075	64.347	59.978	58.313	56.69	52.93	55.96	51.715						
Gain (dBi)	1.7804	1.7278	1.4703	1.554	1.3443	0.9355	0.1994	-0.058	-0.3098	-0.3148	-0.5315	-0.6589	-0.5746	-0.293	-0.1601	0.1778	0.3681	0.345	0.6506	1.1964	-1.9306	-0.752	-0.2147	0.2313	0.7976	0.8448	1.5238	1.9256	2.1105	2.1649	2.2985	2.6738	2.9294	2.7728	2.4975	2.4039	2.2148	1.4825	1.5918	1.1988						
NHPRP xPl/4 (dBm)	-4.2124	-4.5988	-4.9853	-4.9541	-5.2287	-5.6792	-6.2511	-6.3946	-6.5421	-6.5242	-6.5853	-6.5525	-6.3349	-5.8451	-5.5932	-4.945	-4.6586	-4.6157	-4.2258	-3.557	-7.0796	-5.9516	-5.1212	-4.6132	-4.0802	-3.9883	-3.407	-3.0994	-3.1236	-3.1752	-3.281	-3.1047	-2.9352	-2.9778	-3.2737	-3.3983	-3.5264	-3.7547	-3.5448	-3.8692						
NHPRP xPl/6 (dBm)	-5.4651	-5.8729	-6.2883	-6.2642	-6.5597	-7.0693	-7.7015	-7.8711	-8.032	-8.018	-8.0847	-8.0638	-7.8536	-7.364	-7.1197	-6.4633	-6.1768	-6.1308	-5.7256	-5.0116	-9.2366	-7.5307	-6.7667	-6.2881	-5.7391	-5.6258	-4.9946	-4.6656	-4.676	-4.7104	-4.7664	-4.5615	-4.3215	-4.3362	-4.5987	-4.7108	-4.8329	-4.9951	-4.811	-5.1454						
NHPRP xPl/8 (dBm)	-6.5161	-6.9522	-7.3983	-7.3808	-7.7007	-8.2727	-8.9681	-9.1614	-9.3355	-9.3274	-9.4009	-9.3931	-9.1923	-8.709	-8.4715	-7.8063	-7.5178	-7.469	-7.0501	-6.3	-10.183	-8.5496	-7.8894	-7.4768	-6.9956	-6.8912	-6.2819	-5.9703	-5.9851	-6.0126	-6.0474	-5.8348	-5.5546	-5.5483	-5.794	-5.8988	-6.0162	-6.1125	-5.9337	-6.2525						
Upper Hem. PRP (dBm)	-5.1939	-5.5621	-5.9386	-5.9083	-6.1953	-6.6718	-7.2922	-7.4628	-7.6388	-7.628	-7.7388	-7.7484	-7.5541	-7.0967	-6.848	-6.2625	-5.9826	-5.9522	-5.5464	-4.9078	-9.3628	-7.8452	-7.1497	-6.7169	-6.3716	-6.3473	-5.9138	-5.6832	-5.7943	-5.8683	-6.1004	-5.9951	-5.8976	-5.9046	-6.1603	-6.2587	-6.3267	-6.2975	-5.9124	-6.1954						
Lower Hem. PRP (dBm)	-7.7728	-8.2778	-8.736	-8.7112	-9.0206	-9.5179	-10.088	-10.202	-10.308	-10.282	-10.28	-10.178	-9.9261	-9.4006	-9.136	-8.3908	-8.0863	-8.0289	-7.6927	-7.0555	-8.3834	-6.659	-5.8789	-5.4202	-4.9984	-4.9493	-4.5029	-4.2491	-4.2587	-4.3309	-4.4184	-4.2243	-4.0494	-4.1263	-4.4649	-4.6034	-4.7636	-5.3056	-5.1814	-5.5751						
NHPRP4 / TRP Ratio (dB)	-0.928	-0.898	-0.8798	-0.8769	-0.8569	-0.8238	-0.7925	-0.7851	-0.7808	-0.7792	-0.7697	-0.7673	-0.765	-0.7578	-0.7604	-0.7578	-0.7606	-0.7594	-0.7478	-0.7171	-1.8743	-1.7502	-1.6635	-1.6032	-1.4596	-1.4064	-1.266	-1.2025	-1.1749	-1.1537	-1.1128	-1.095	-1.0696	-1.0631	-1.0536	-1.056	-1.0614	-0.9917	-1.0235	-1.0054						
NHPRP4 / TRP Ratio (%)	80.761	81.32	81.663	81.716	82.094	82.722	83.319	83.463	83.545	83.577	83.759	83.805	83.85	83.988	83.938	83.989	83.934	83.977	84.182	84.78	64.948	66.831	68.18	69.132	71.457	72.337	74.713	75.815	76.297	76.672	77.396	77.714	78.17	78.287	78.459	78.415	78.317	79.585	79.004	79.335						
NHPRP6 / TRP Ratio (dB)	-2.1807	-2.1721	-2.1828	-2.1871	-2.1879	-2.2138	-2.2434	-2.2615	-2.2707	-2.274	-2.269	-2.2786	-2.2838	-2.2767	-2.287	-2.2761	-2.2788	-2.2735	-2.2475	-2.1717	-3.4013	-3.3293	-3.309	-3.278	-3.1184	-3.0439	-2.8536	-2.7686	-2.7273	-2.6888	-2.5982	-2.5517	-2.4559	-2.4215	-2.3786	-2.3685	-2.368	-2.2321	-2.2898	-2.2815						
NHPRP6 / TRP Ratio (%)	60.524	60.644	60.495	60.435	60.424	60.065	59.658	59.409	59.283	59.238	59.306	59.175	59.105	59.201	59.061	59.21	59.172	59.244	59.6	60.65	45.695	46.459	46.677	47.011	48.771	49.615	51.837	52.862	53.367	53.842	54.977	55.568	56.808	57.26	57.828	57.963	57.97	59.812	59.023	59.135						
NHPRP8 / TRP Ratio (dB)	-3.2317	-3.2515	-3.2927	-3.3036	-3.3289	-3.4172	-3.5095	-3.5518	-3.5742	-3.5824	-3.5852	-3.6078	-3.6225	-3.6217	-3.6388	-3.6191	-3.6199	-3.6137	-3.572	-3.4601	-4.3479	-4.3482	-4.4316	-4.4667	-4.375	-4.3092	-4.1409	-4.0734	-4.0364	-3.991	-3.8792	-3.8251	-3.689	-3.6335	-3.5739	-3.5565	-3.5513	-3.3495	-3.4125	-3.3886						
NHPRP8 / TRP Ratio (%)	47.515	47.299	46.852	46.734	46.463	45.528	44.571	44.139	43.912	43.829	43.8	43.573	43.426	43.434	43.264	43.461	43.452	43.534	43.934	45.081	36.746	36.744	36.044	35.754	36.518	37.075	38.54	39.144	39.479	39.893	40.933	41.447	42.767	43.316	43.915	44.091	44.144	46.244	45.578	45.829						
LHPRP / TRP Ratio (dB)	-1.9095	-1.8613	-1.833	-1.8312	-1.8234	-1.8164	-1.8337	-1.8532	-1.8774	-1.883	-1.9231	-1.9631	-1.9843	-2.0094	-2.0153	-2.0753	-2.0846	-2.0949	-2.0684	-2.0679	-3.5275	-3.6437	-3.692	-3.7069	-3.751	-3.7653	-3.7728	-3.7863	-3.8456	-3.8467	-3.9322	-3.9853	-4.0319	-3.9899	-3.9402	-3.9163	-3.8618	-3.5345	-3.3912	-3.3315						
LHPRP / TRP Ratio (%)	64.424	65.143	65.569	65.597	65.714	65.821	65.559	65.265	64.902	64.818	64.222	63.634	63.325	62.96	62.875	62.012	61.879	61.731	62.11	62.117	44.386	43.214	42.737	42.591	42.16	42.021	41.949	41.819	41.251	41.241	40.437	39.945	39.519	39.904	40.363	40.585	41.098	44.315	45.802	46.435						
LHPRP / TRP Ratio (dB)	-4.4884	-4.5771	-4.6305	-4.6341	-4.6488	-4.6624	-4.6293	-4.5923	-4.5471	-4.5368	-4.4639	-4.393	-4.3563	-4.3133	-4.3033	-4.2035	-4.1883	-4.1716	-4.2147	-4.2155	-2.5482	-2.4576	-2.4212	-2.4102	-2.3778	-2.3673	-2.3619	-2.3522	-2.31	-2.3093	-2.2503	-2.2145	-2.1838	-2.2115	-2.2448	-2.2611	-2.2987	-2.5426	-2.6602	-2.7112						
LHPRP / TRP Ratio (%)	35.576	34.857	34.431	34.403	34.286	34.179	34.441	34.735	35.098	35.182	35.778	36.366	36.675	37.04	37.136	37.988	38.121	38.269	37.89	37.883	55.614	56.786	57.264	57.41	57.84	57.979	58.051	58.181	58.749	58.759	59.563	60.055	60.481	60.097	59.637	59.415	58.902	55.685	54.198	53.565						
Front/Back Ratio (dB)	6.9772	6.5955	6.1211	6.1199	5.8156	5.2469	4.5952	4.5699	4.2312	4.0242	3.9215	3.5916	3.5314	3.2222	3.035	2.734	2.6538	2.6396	2.8011	3.1175	3.5635	3.1885	2.7768	3.2753	4.7288	5.0614	5.8855	5.048	5.0923	4.964	4.4592	4.4446	4.0848	3.4547	3.2906	3.064	2.8403	2.1523	2.5359	3.3597						
Phi BW (°)	88	88	89	89	89	93	101	103	106	107	110	115	119	130	137	166	169	172	178	191	67	68	108	104	95	96	126	114	111	99	88	83	88	81	94	79	81	108	108	106						
+ Phi BW (°)	46	44	45	45	45	47	53	51	55	57	56	60	60	64	67	72	73	74	78	81	41	44	68	64	54	57	70	61	60	50	40	37	42	34	50	34	37	61	63	62						
- Phi BW (°)	42	44	44	44	44	46	48	52	51	50	54	55	59	66	70	94	96	98	102	110	26	24	40	40	41	39	56	53	51	49	48	46	46	47	44	45	44	47	45	44						
Theta BW (°)	91	85	80	78	73	62	53	52	50	49	49	48	47	47	45	45	45	46	45	45	41	42	34	34	33	34	32	30	27	26	24	23	22	23	21	21	21	22	23	23						
+ Th. BW (°)	53	50	47	46	43	34	28	27	26	25	25	25	24	24	23	23	23	24	24	25	27	28	20	21	21	22	10	10	10	10	10	10	10	10	10	10	10	10	11	11						
- Th. BW (°)	38	35	33	32	30	28	25	25	24	24	24	23	23	23	22	22	22	22	21	20	14	14	14	13	12	12	22	20	17	16	14	13	12	13	11	11	11	12	12	12						
Boresight Phi (°)	10.95	13.6	13.6	13.6	13.6	13.6	10.95	13.6	10.95	8.15	10.95	8.15	10.95	8.15	359.95	352.9	352.9	350.5	350.5	352.9	195.75	189.2	151.95	154.75	157.65	154.75	135	138.35	135	138.35	141.2	141.2	141.2	147.25	141.2	147.25	147.25	156.15	158.95	161.65						
Boresight Th. (°)	60	60	60	60	60	60	60	60	60	60	60	60	60	60	60	60	60	60	60	60	150	150	105	105	105	105	120	120	120	120	120	120	120	120	120	120	120	120	120	120						
Maximum Power (dBm)	1.7804	1.7278	1.4703	1.554	1.3443	0.9355	0.1994	-0.058	-0.3098	-0.3148	-0.5315	-0.6589	-0.5746	-0.293	-0.1601	0.1778	0.3681	0.345	0.6506	1.1964	-1.9306	-0.752	-0.2147	0.2313	0.7976	0.8448	1.5238	1.9256	2.1105	2.1649	2.2985	2.6738	2.9294	2.7728	2.4975	2.4039	2.2148	1.4825	1.5918	1.1988						
Minimum Power (dBm)	-19.908	-16.849	-17.49	-17.815	-19.332	-20.83	-19.275	-19.768	-20.392	-20.395	-20.718	-21.162	-20.644	-19.511	-19.014	-17.327	-17.12	-17.312	-16.456	-15.783	-11.06	-11.575	-11.676	-11.593	-12.405	-12.477	-12.053	-12.303	-12.812	-13.065	-14.684	-15.594	-13.891	-12.848	-13.034	-14.131	-14.688	-15.036	-14.868	-17.015						
Average Power (dBm)	-3.6727	-4.1121	-4.5395	-4.5144	-4.8367	-5.3806	-6.0587	-6.2408	-6.414	-6.4026	-6.4976	-6.487	-6.2871	-5.827	-5.5825	-4.9622	-4.6739	-4.6385	-4.2726	-3.6722	-5.8315	-4.2451	-3.5339	-3.1257	-2.8356	-2.8358	-2.4823	-2.2826	-2.3454	-2.4273	-2.5932	-2.4392	-2.3019	-2.352	-2.6601	-2.7778	-2.8935	-3.263	-3.0043	-3.3818						
Max/Min Ratio (dB)	21.688	18.577	18.96	19.369	20.677	21.766	19.474	19.71	20.082	20.08	20.186	20.503	20.069	19.218	18.854	17.505	17.488	17.657	17.106	16.979	9.1293	10.823	11.461	11.824	13.262	13.322	13.576	14.228	14.922	15.23	16.983	18.267	16.82	15.62	15.531	16.535	16.903	16.519	16.46	18.213						
Max/Avg Ratio (dB)	5.4531	5.8399	6.0098	6.0684	6.181	6.3161	6.2582	6.1828	6.1042	6.0878	5.9661	5.8281	5.7125	5.534	5.4224	5.14	5.0419	4.9835	4.9231	4.8686	3.901	3.4932	3.3192	3.357	3.6332	3.6806	4.0061	4.2082	4.4558	4.5921	4.8917	5.1129	5.2313	5.1248	5.1575	5.1816	5.1083	4.7456	4.5961	4.5805						
Min/Avg Ratio (dB)	-16.235	-12.737	-12.95	-13.301	-14.496	-15.45	-13.216	-13.527	-13.978	-13.992	-14.22	-14.675	-14.357	-13.684	-13.432	-12.365	-12.446	-12.674	-12.183	-12.111	-5.2284	-7.3301	-8.1418	-8.4671	-9.6289	-9.6411	-9.5703	-10.02	-10.466	-10.638	-12.091	-13.154	-11.589	-10.496	-10.374	-11.353	-11.795	-11.773	-11.864	-13.633						
Average Gain (dB)	-3.2844	-3.7008	-4.1055	-4.0772	-4.3718	-4.8555	-5.5486	-5.6096	-5.7613	-5.745	-5.8157	-5.7852	-5.5699	-5.0873	-4.8328	-4.1873	-3.898	-3.8573	-3.478	-2.8399	-5.8352	-4.2014	-3.4577	-3.01	-2.6207	-2.582	-2.141	-1.897	-1.9487	-2.0216	-2.1682	-2.0098	-1.8656	-1.9147	-2.2201	-2.3424	-2.4649	-2.763	-2.5212	-2.8639						
E-Plane BW (°)	90	86	84	82	79	73	65	61	58	58	57	55	53	52	49	47	47	46	47	46	45	48	36	35	33	35	32	30	26	26	24	23	22	23	22	21	21	23	24	24						
+ E-Plane BW (°)	48	45	45	43	42	38	35	32	30	31	29	28	27	26	24	23	23	22	22	20	28	29	22	22	21	23	10	10	10	10	10	10	10	10	11	10	10	11	12	12						
- E-Plane BW (°)	42	41	39	39	37	35	30	29	28	27	28	27	26	26	25	24	24	24	25	26	17	19	14	13	12	12	22	20	16	16	14	13	12	13	11	11	11	12	12	12						
H-Plane BW (°)	110	99	89	87	80	73	75	79	81	81	85	90	102	124	127	147	152	159	160	174	74	75	226	168	91	106	127	92	118	77	69	66	68	64	71	64	66	70	73	77						
+ H-Plane BW (°)	44	40	38	38	36	36	38	43	44	43	47	51	63	83	41	49	53	59	106	114	56	57	195	136	45	70	79	48	57	36	31	31	33	28	36	29	31	37	42	47						
- H-Plane BW (°)	66	59	51	49	44	37	37	36	37	38	38	39	39	41	86	98	99	100	54	60	18	18	31	32	46	36	48	44	61	41	38	35	36	36	35	35	35	35	31	30						