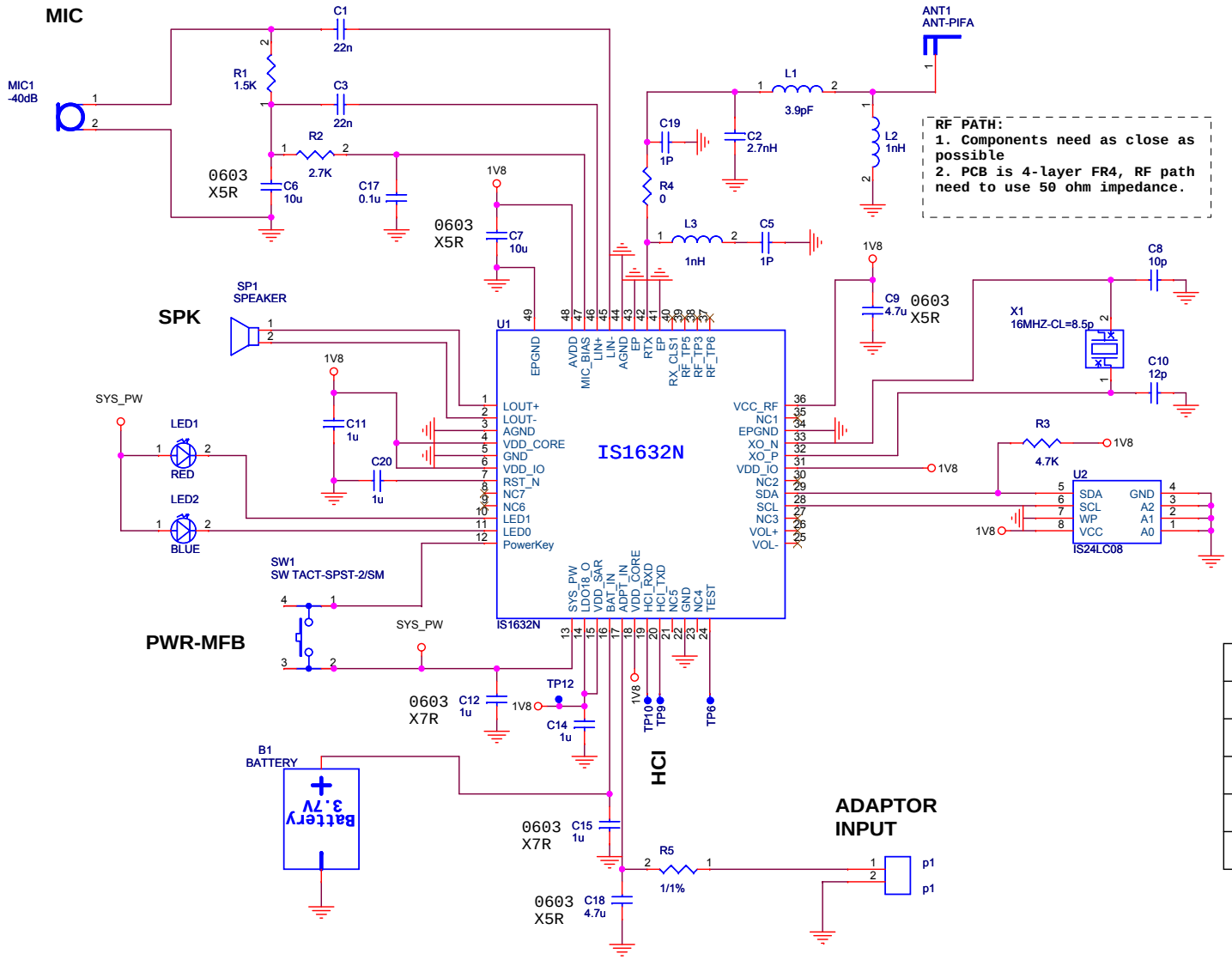

RF PATH:
1. Components need as close as possible
2. PCB is 4-layer FR4, RF path need to use 50 ohm impedance.

Test Pad description

TP1	RF_TP	TP7	BAT+
TP2	MIC+	TP8	BAT-
TP3	MIC-	TP9	TXD
TP4	SPK+	TP10	RXD
TP5	SPK-	TP11	ADP_IN
TP6	TEST	TP12	SAR

ISSC
穩入 厩堕跋 蘋狗 隔2-1腹3加
Tel: 03 - 5778385
Designer: Chad

Board Name: IS1632N		P/N
Size: B	Title: MH1632N	Rev
Date: Thursday, July 23, 2009	Sheet 1 of 3	