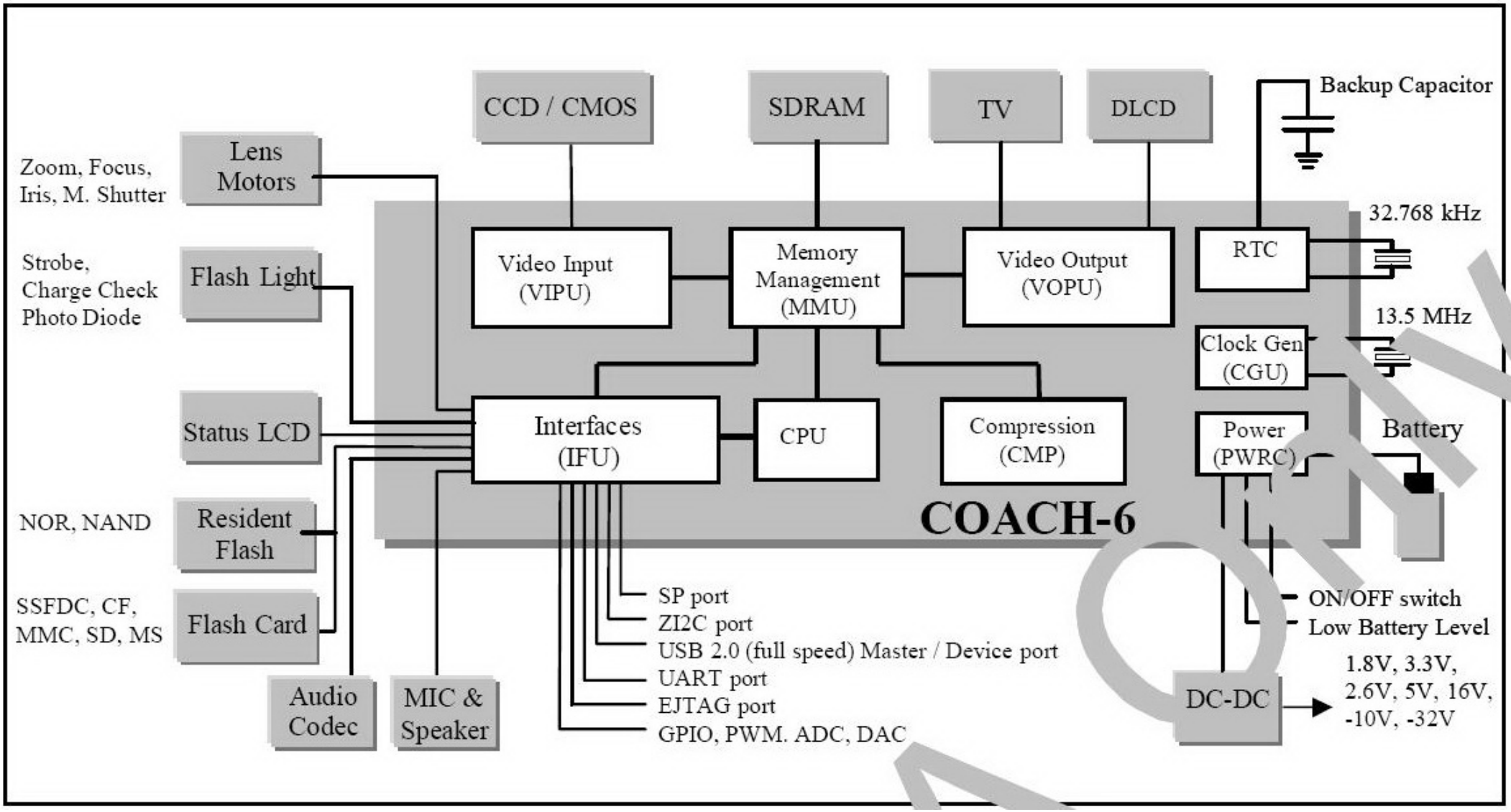COACH-6 "Camera On A Chip" Digital Still Camera Processor