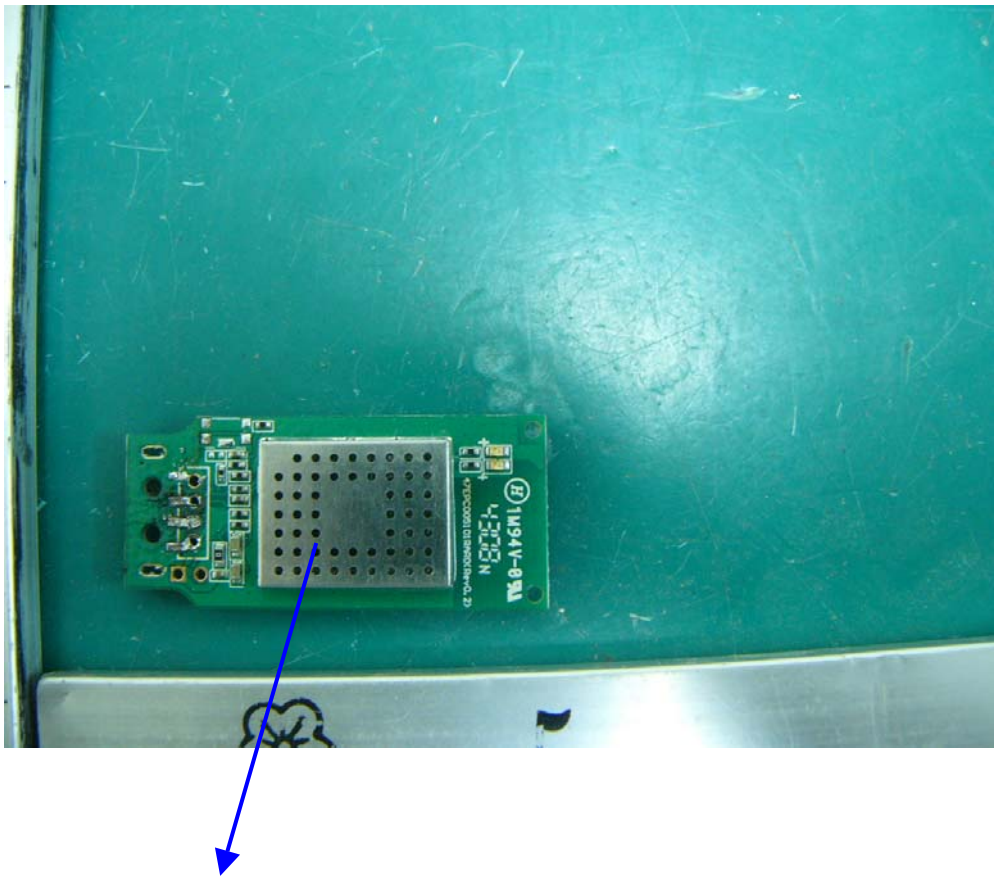

Label Location

REVISIONS				
ZONE	REV	DESCRIPTION	APPD	DATE
	X1	FIRST DESIGN	BEN NG	23 APR 2009

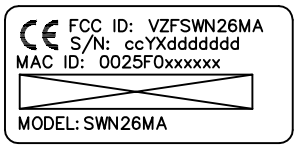

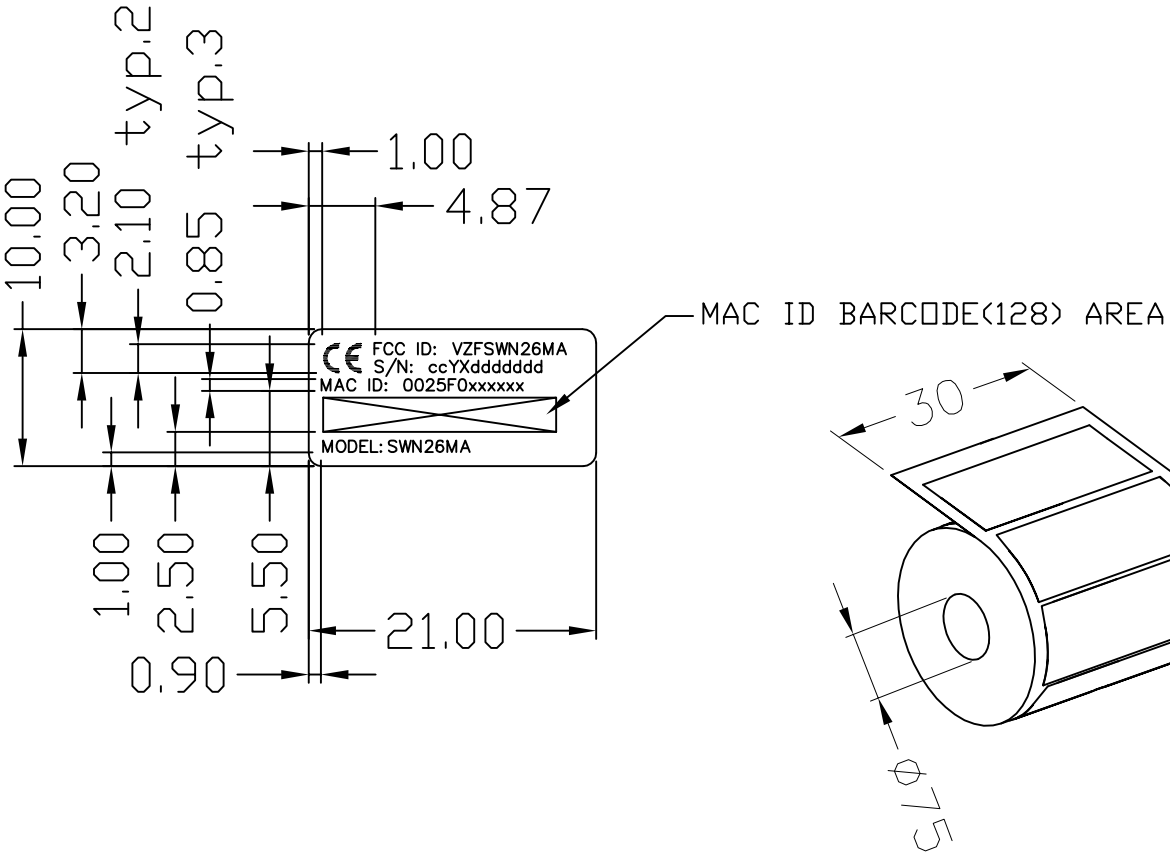

NOTES:

1. MATERIAL: 0.05mm THICKNESS POLYESTER FILM LABEL(FOR BRADY PRINTER 600).
2. THE LABEL IS PRINTED BY PRODUCTION.
3. FINISH: POLISHED.
4. RIBBON TYPE: IMTL, RIBBON RICOH B110CR.
5. THE PART NEED BE RoHS COMPLIANT.
6. SUPPLIER LETTER OF SELF-DECLARATION ANF RoHS TESTING REPORT MUST BE PRESENT ALONG WITH FIRST ARTICLE SUBMISSION.

QTY

TOLERANCES
UNLESS OTHERWISE SPECIFIED
DIMENSIONS ARE IN MM
DECIMALS ANGULAR
.X ± 0.25 ± 1°
.XX ± 0.13
DO NOT SCALE
IF IN DOUBT ASK

WARNING
THIS DOCUMENT IS THE PROPERTY OF SUGA ELECTRONICS OR ITS CLIENTS AND CONTAINS CONFIDENTIAL AND TRADE SECRET INFORMATION OF SUGA ELECTRONICS OR ITS CLIENTS.

MODEL NO		SUGA ELECTRONICS LTD.
PART NO		
DWN BEN NG	DATE 23 APRIL 2009	TITLE
CKD	DATE	FCC LABEL- SWN26MA
APPD	DATE	
CAD FILENAME FCC LABEL-SWN26MA.dwg	SCALE 2 : 1	DWG NO / SHEET 1 OF 1 / REV X1