Suga Electronics Limited

Model: SWBGFSA-0

Block Diagram

Apr 29, 2014

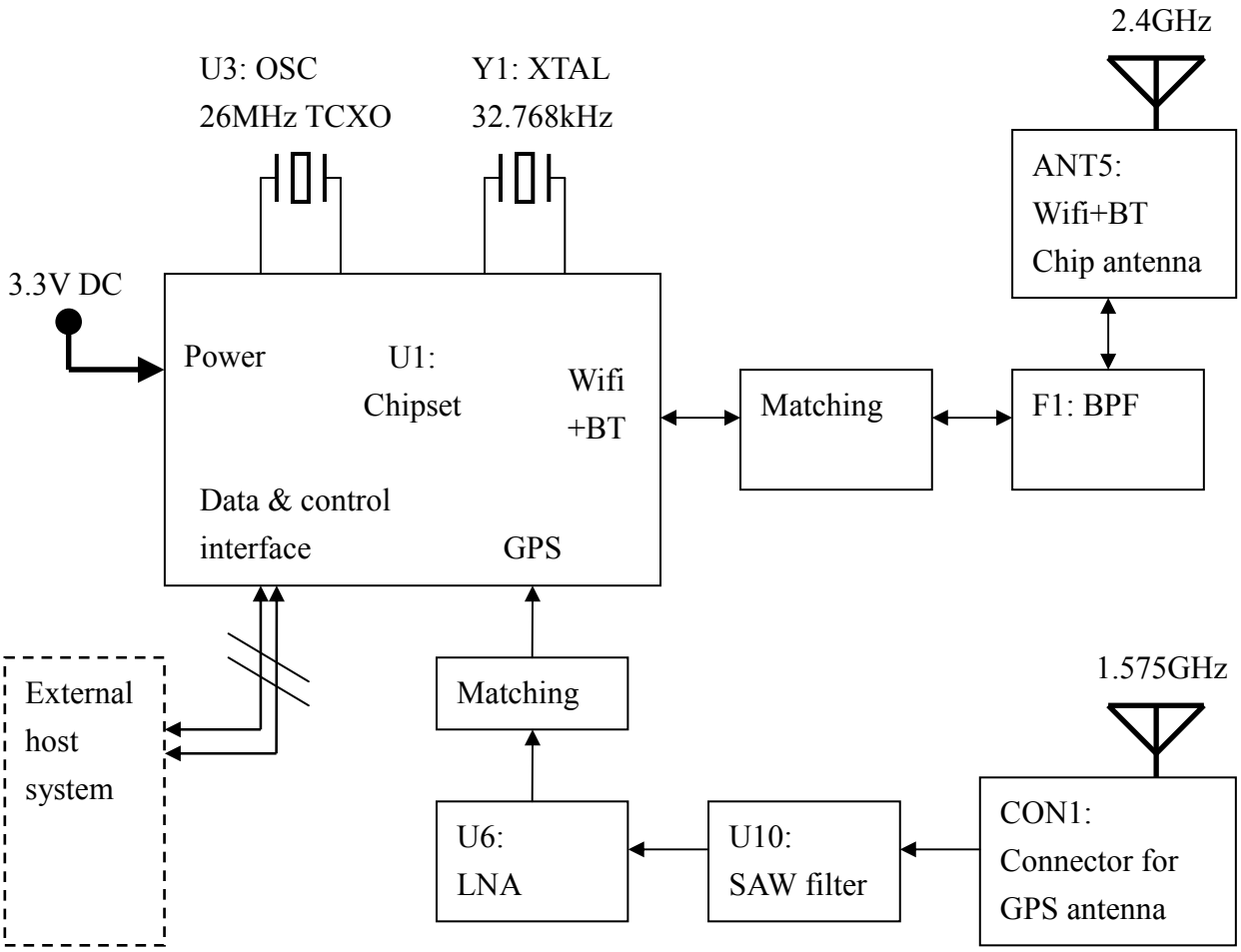

© Suga Electronics Limited. All Rights Reserved.
Information in this document is subject to change without prior notice.