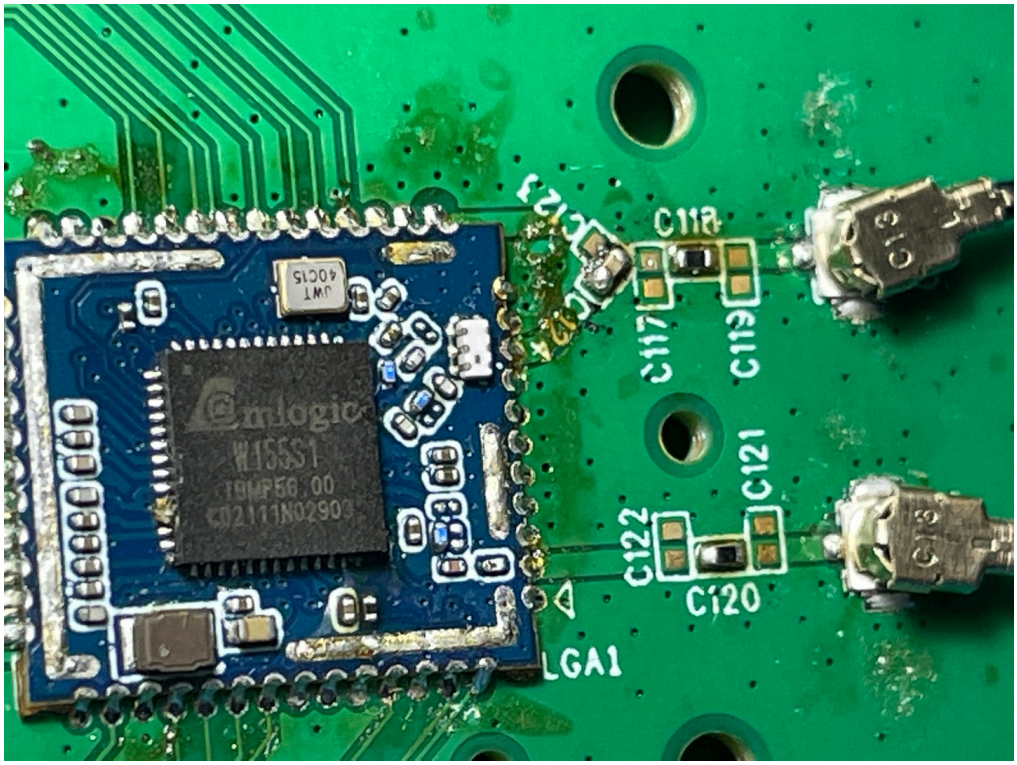
C118
C117
C119
C121
C122
C120
LGA1
JWT
40C15
amlogic
W155S1
19MP56.00
C02111N02903

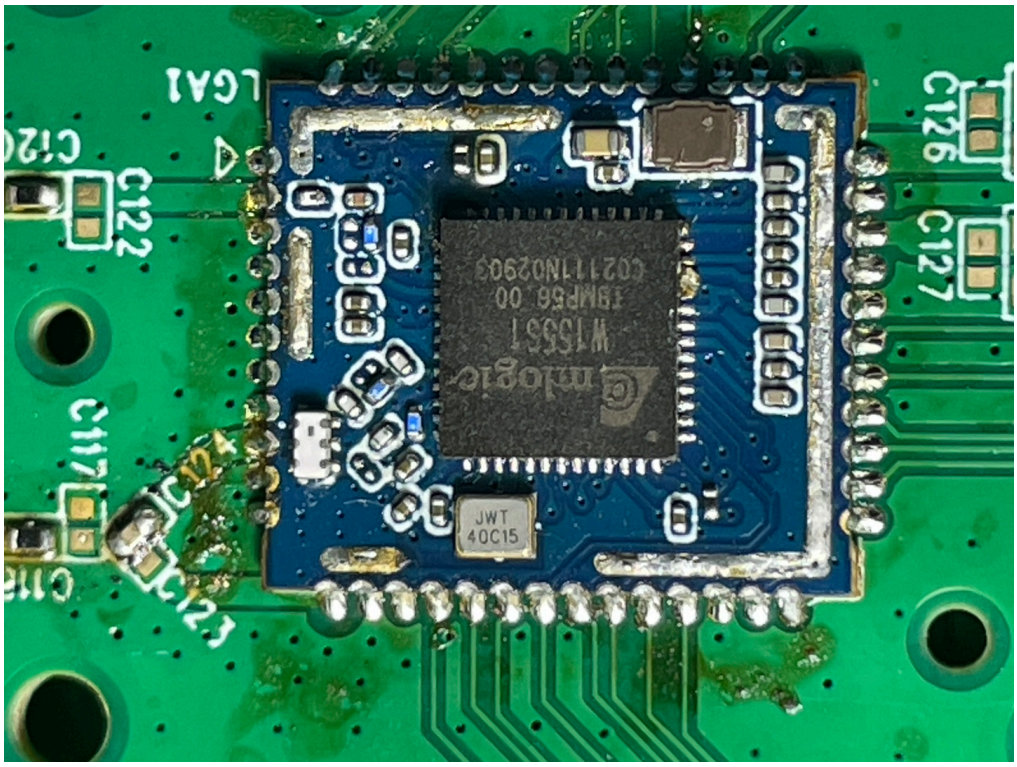
C126
C127
C122
LGA1
JWT
40C15
amlogic
W155S1
19MP56.00
C02111N02903

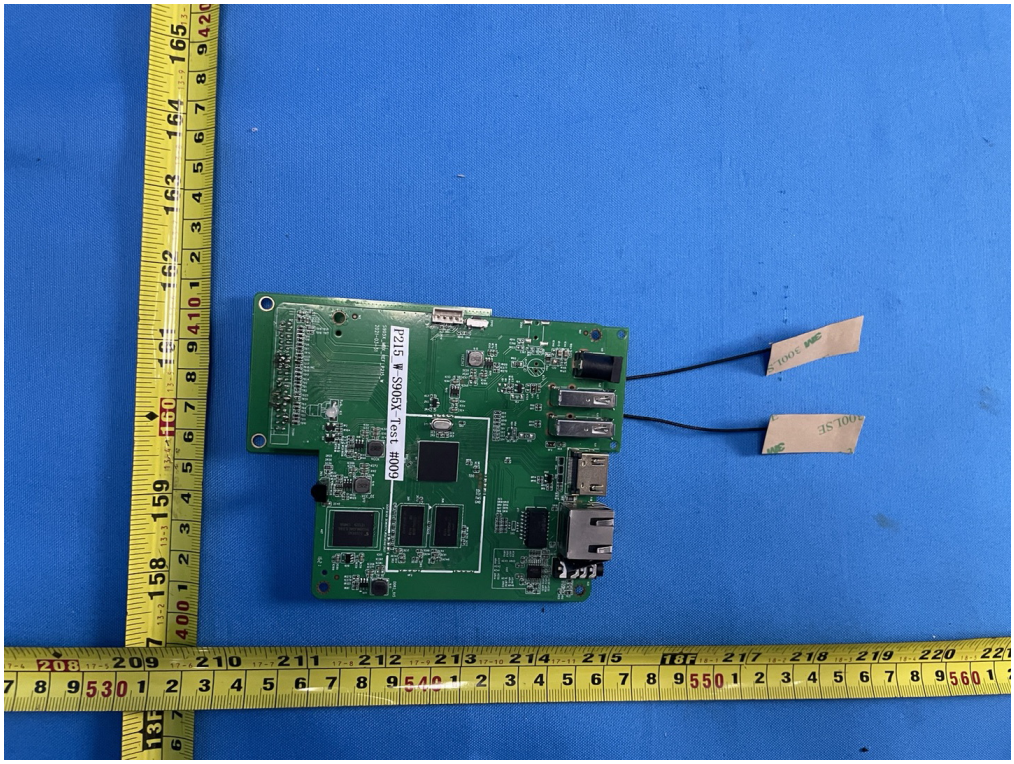
P215 W S906X Test #009

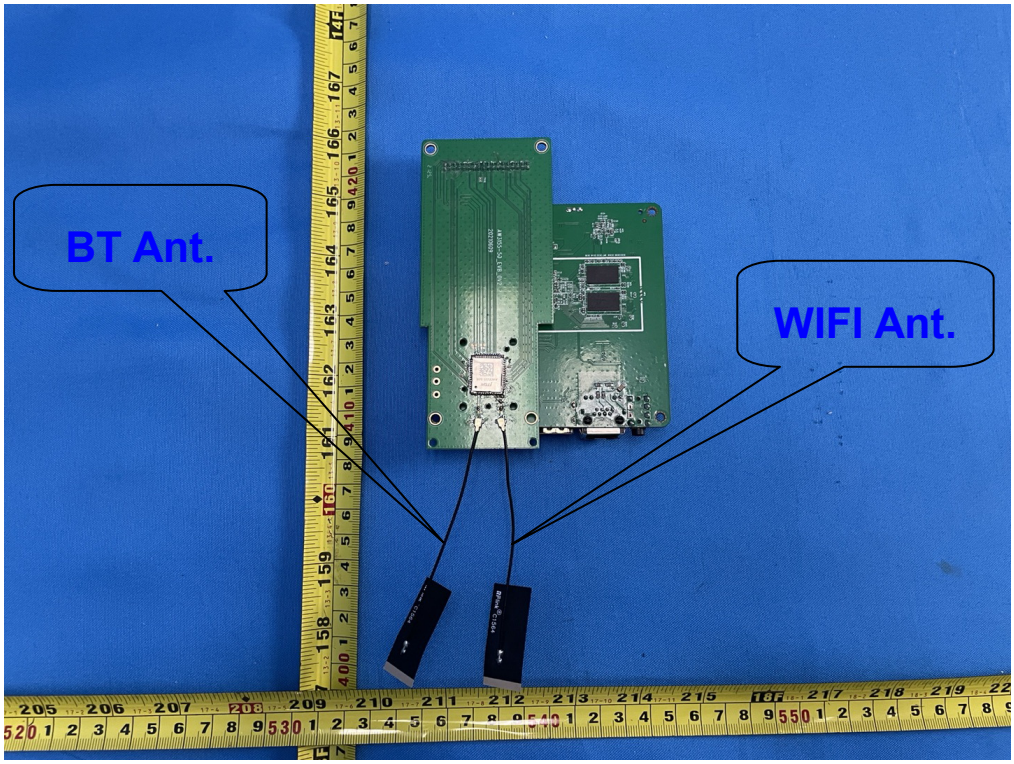
BT Ant.
WIFI Ant.