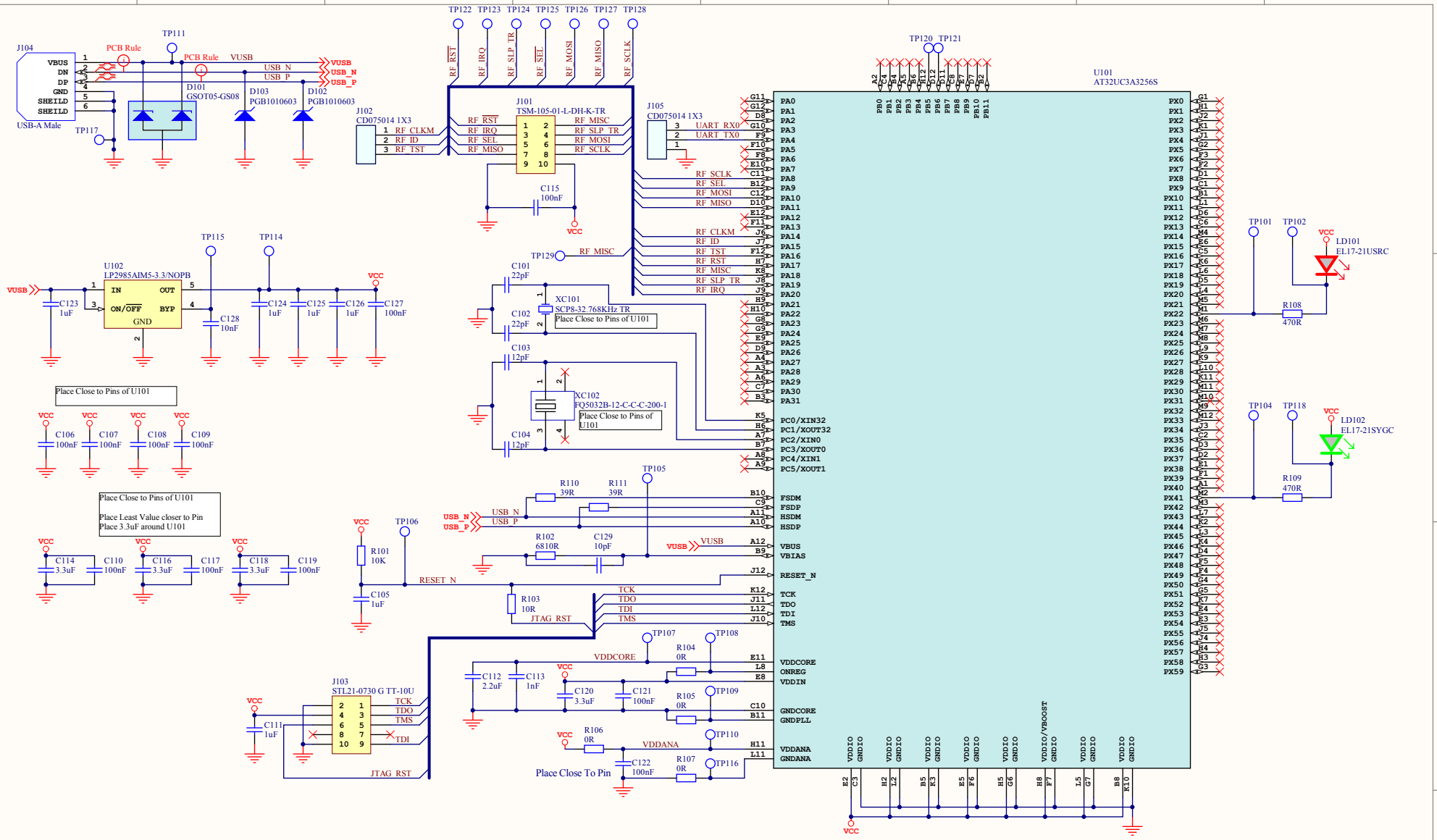

Private & Confidential

PCB101
A08-0671

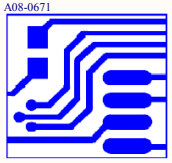

Place Label on the Bottom Side

Z101
PCBA Label

Embedded Wireless Jaya Sdn Bhd			
702, Uptown 2, SS21/37			
Damansara Uptown, *			
PJ, Sel, Malaysia			
Date:	3/23/2010	9:54:39 AM	PAGE: 1 of 1
Document number:	A12-0172	Revision:	Rev 3
TITLE: USB Adaptor			
A08-0672 Rev4.SchDoc			