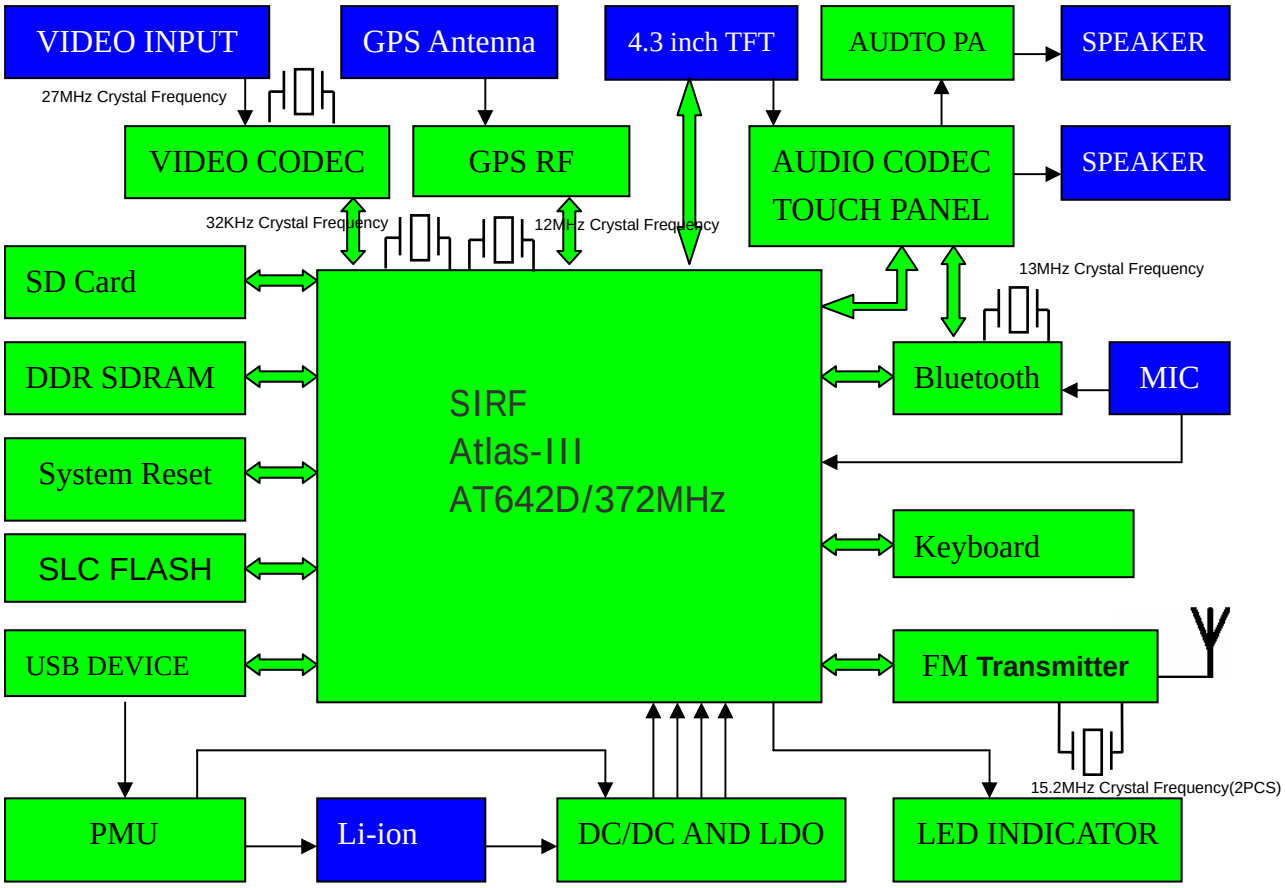Block Darmg of 82C-1