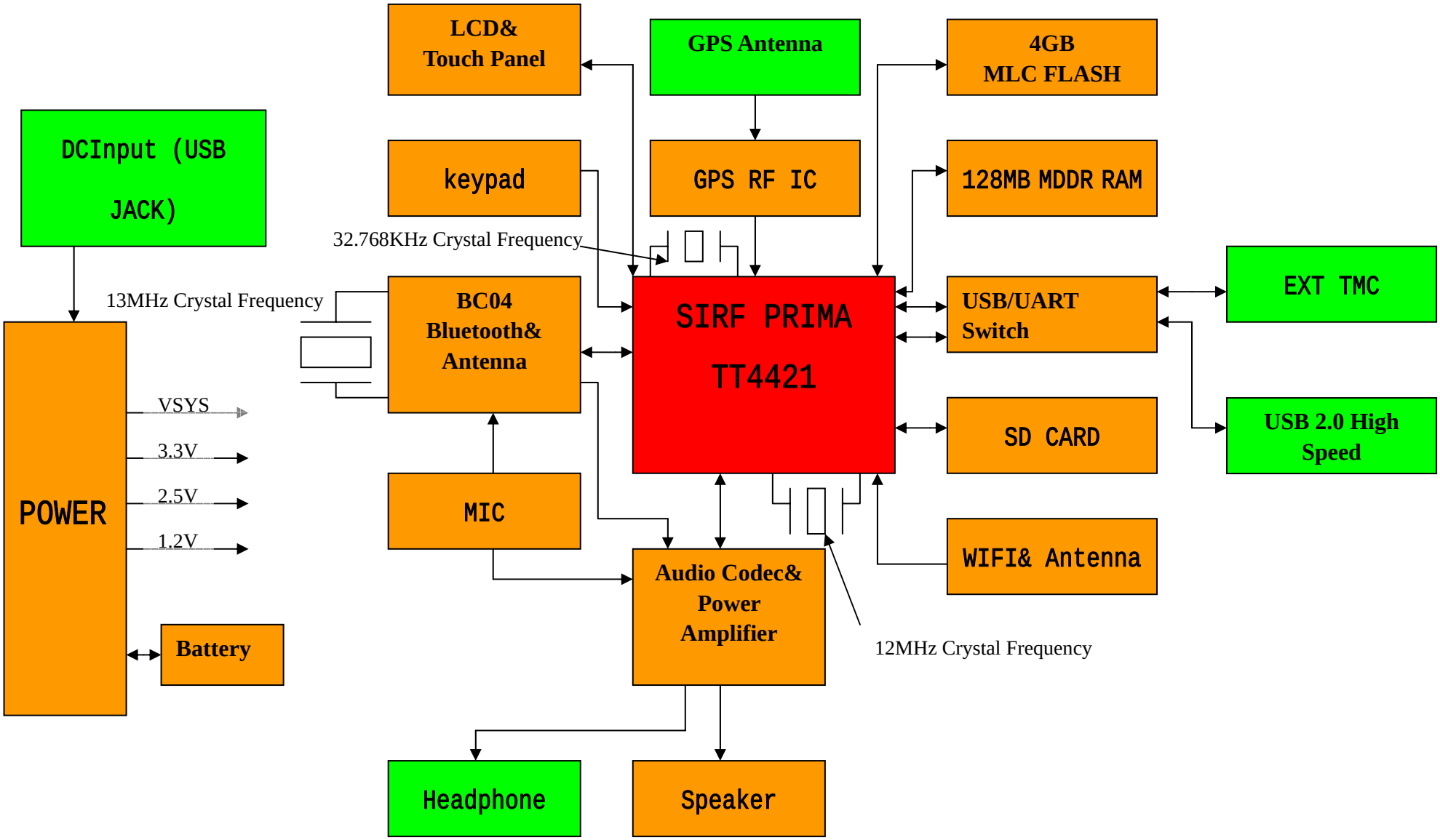80T Block Diagram