FCC 15B Test Report

FCC ID	:	**VQK-F05F**
Equipment	:	**Mobile Phone**
Model No.	:	**F-05F**
Brand Name	:	**FUJITSU**
Applicant	:	**FUJITSU LIMITED**
Address	:	**1-1, Kamikodanaka 4-chome, Nakahara-ku, Kawasaki 211-8588, Japan**
Standard	:	**FCC Part 15, Subpart B, Class B ANSI C63.4:2009**
Received Date	:	**Dec. 25, 2013**
Tested Date	:	**Mar. 05 ~ Mar. 10, 2014**

We, International Certification Corp., would like to declare that the tested sample has been evaluated and in compliance with the requirement of the above standards. It may be duplicated completely for legal use with the approval of the applicant. It shall not be reproduced except in full without the written approval of our laboratory.

Approved & Reviewed by:

Kent Chen / Assistant Manager

Testing Laboratory 2732

Table of Contents

1 GENERAL DESCRIPTION 5

1.1 Information 5
1.2 The Equipment and Calibration Data 7
1.3 Testing Applied Standards 8
1.4 Measurement Uncertainty 8

2 TEST CONFIGURATION 9

2.1 Testing Condition 9
2.2 The Worst Case Measurement Configuration 9
2.3 Local Support Equipment List 10
2.4 Test Setup Chart 11
2.5 Test Software and Operating Condition 12

3 EMISSION TESTS RESULTS 13

3.1 Conducted Emissions 13
3.2 Radiated Emissions 16

4 TEST LABORATORY INFORMATION 22

Release Record

Report No.	Version	Description	Issued Date
FD3D2502	Rev. 01	Initial issue	Mar. 24, 2014

Summary of Test Results

FCC Part 15, Subpart B Emission Tests				
Ref. Std. Clause	**Test Standard**	**Test Items**	**Measured**	**Result**
15.107	FCC Part 15, Subpart B, Class B	Conducted Emissions	-6.60dB AV@ 0.440MHz.	Pass
15.109	FCC Part 15, Subpart B, Class B	Radiated Emissions	-3.28dB PK@ 480.08MHz.	Pass

1 General Description

1.1 Information

1.1.1 Product Details

Product Name	Mobile Phone
Brand Name	FUJITSU
Model Name	F-05F
IMEI Code	359401050025037
H/W Version	V2.1.0
S/W Version	R18Ae

1.1.2 Specification of the Equipment under Test (EUT)

WLAN	
Operating Frequency	802.11b/g/n: 2412 MHz ~ 2462 MHz 802.11a/n/ac: 5180 MHz ~ 5240 MHz; 5260 MHz ~ 5320 MHz; 5500 MHz ~ 5700 MHz
Antenna Type	λ/4 Monopole Antenna
Modulaton Type	802.11b: DSSS (DBPSK / DQPSK / CCK) 802.11a/g/n/ac: OFDM (BPSK / QPSK / 16QAM / 64QAM)
Bluetooth	
Operating Frequency	2402 MHz ~ 2480 MHz
Antenna Type	λ/4 Monopole Antenna
Modulaton Type	Bluetooth 4.0 LE: GFSK Bluetooth BR(1Mbps): GFSK Bluetooth EDR (2Mbps): π/4-DQPSK Bluetooth EDR (3Mbps): 8-DPSK
WWAN	
Operating Frequency	TX: GSM850: 824.2 MHz ~ 848.8 MHz GSM1900: 1850.2 MHz ~ 1909.8MHz WCDMA Band V: 826.4 MHz ~ 846.6 MHz RX: GSM850: 869.2 MHz ~ 893.8 MHz GSM1900: 1930.2 MHz ~ 1989.8 MHz WCDMA Band V: 871.4 MHz ~ 891.6 MHz
Antenna Type	λ/4 Monopole Antenna
Modulaton Type	GSM: GMSK GPRS: GMSK WCDMA: QPSK (Uplink) HSDPA: QPSK (Uplink) HSUPA: QPSK (Uplink)

RFID/NFC	
Operating Frequency	13.56 MHz
Antenna Type	Loop Antenna
Modulaton Type	ASK
GPS	
Operating Frequency	1.57542 GHz
Modulaton Type	BPSK

1.1.3 EUT Operational Condition

Power Supply Type	Battery: 3.75Vdc / 3200mAh Adapter: DC5.0V 1.8A, DC9.0V 1.8A

1.1.4 Accessories

Accessories		
No.	**Equipment**	**Description**
1	Battery (Built-in battery)	Brand Name: Panasonic Model Name: CA54310-0052 Power Rating: O/P: 3.75Vdc, 3200mA

1.2 The Equipment and Calibration Data

Test Item	Conducted Emission				
Test Site	Conduction room 1 / (CO01-WS)				
Instrument	**Manufacturer**	**Model No.**	**Serial No.**	**Calibration Date**	**Calibration Until**
EMC Receiver	R&S	ESCS 30	100169	Oct. 15, 2013	Oct. 14, 2014
LISN	SCHWARZBECK	Schwarzbeck 8127	8127-667	Nov. 23, 2013	Nov. 22, 2014
LISN (Support Unit)	SCHWARZBECK	Schwarzbeck 8127	8127-666	Dec. 04, 2013	Dec. 03, 2014
RF Cable-CON	Woken	CFD200-NL	CFD200-NL-001	Apr. 24, 2013	Apr. 23, 2014
50 ohm terminal (Support Unit)	NA	50	04	Apr. 22, 2013	Apr. 21, 2014
Note: Calibration Interval of instruments listed above is one year.					

Test Item	Radiated Emission below 1GHz test				
Test Site	966 chamber1 / (03CH01-WS)				
Instrument	**Manufacturer**	**Model No.**	**Serial No.**	**Calibration Date**	**Calibration Until**
Receiver	R&S	ESR3	101658	Jan. 10, 2014	Jan. 09, 2015
Bilog Antenna	SCHWARZBECK	VULB9168	VULB9168-522	Jan. 02, 2014	Jan. 01, 2015
Preamplifier	Burgeon	BPA-530	SN:100219	Nov. 22, 2013	Nov. 21, 2014
LF cable 3M	Woken	CFD400NL-LW	CFD400NL-001	Dec. 16, 2013	Dec. 15, 2014
LF cable 10M	Woken	CFD400NL-LW	CFD400NL-002	Dec. 16, 2013	Dec. 15, 2014
Note: Calibration Interval of instruments listed above is one year.					

Test Item	Radiated Emission above 1GHz				
Test Site	966 chamber 2 / (03CH02-WS)				
Instrument	**Manufacturer**	**Model No.**	**Serial No.**	**Calibration Date**	**Calibration Until**
Spectrum Analyzer	R&S	FSV40	101499	Feb. 08, 2014	Feb. 07, 2015
Horn Antenna 1G-18G	SCHWARZBECK	BBHA 9120 D	BBHA 9120 D 1095	Jan. 07, 2014	Jan. 06, 2015
Preamplifier	Agilent	83017A	MY39501309	Dec. 09, 2013	Dec. 08, 2014
RF Cable	HUBER+SUHNER	SUCOFLEX104	MY16140/4	Dec. 17, 2013	Dec. 16, 2014
RF Cable	HUBER+SUHNER	SUCOFLEX104	MY16018/4	Dec. 17, 2013	Dec. 16, 2014
RF Cable	HUBER+SUHNER	SUCOFLEX104	MY16015/4	Dec. 17, 2013	Dec. 16, 2014
Note: Calibration Interval of instruments listed above is one year.					

1.3 Testing Applied Standards

According to the specifications of the manufacturer, the EUT must comply with the requirements of the following standards:

FCC Part 15, Subpart B, Class B
ANSI C63.4:2009

1.4 Measurement Uncertainty

CISPR 16-4-2 requires that an estimate of the measurement uncertainties associated with the emissions test results be included in the report. The measurement uncertainties given below are based on a 95% confidence level (based on a coverage factor (k=2)

Measurement Uncertainty		
Test Item	**Frequency**	**Uncertainty**
Conducted Emissions	150kHz ~ 30MHz	2.8 dB
Radiated Emissions	30MHz ~ 1GHz	3.9 dB
	Above 1GHz	4.2 dB

2 Test Configuration

2.1 Testing Condition

Test Item	Test Site	Ambient Condition	Tested By
AC Conduction	CO01-WS	23°C / 53%	Skys Huang
Radiated Emissions ≤1GHz	03CH01-WS	21°C / 65%	Peter Lin
Radiated Emissions >1GHz	03CH02-WS	20°C / 68%	Peter Lin

2.2 The Worst Case Measurement Configuration

Conduction Pretest Mode	
Pretest Mode	**Operating Description**
1	GSM850 Idle + Bluetooth Idle + WLAN (2.4G) Idle + GPS Rx + Earphone + Battery 20% + USB Cable + Adapter
2	GSM850 Idle + Bluetooth Idle + WLAN (2.4G) Idle + GPS Rx + Earphone + Battery 100% + USB Cable + Adapter
3	PCS1900 Idle + Bluetooth Idle + WLAN (5G) Idle + Camera + Earphone + Battery 20% + USB Cable + Adapter
4	WCDMA850 Idle + Bluetooth Idle + WLAN (2.4G) Idle + MPEG4 + Earphone + Battery 20% + USB Cable + Adapter
5	GSM850 Idle + Bluetooth Idle + WLAN (5G) Idle + SD Card R/W + Earphone + Battery 20% + USB Cable (Data Link with Notebook)
For **Pretest mode 1** is the worst case and only its data was record in this test report.	

Radiation Pretest Mode	
Pretest Mode	**Operating Description**
1	GSM850 Idle + Bluetooth Idle + WLAN (2.4G) Idle + GPS Rx + Earphone + Battery 20% + USB Cable + Adapter
2	GSM850 Idle + Bluetooth Idle + WLAN (2.4G) Idle + GPS Rx + Earphone + Battery 100% + USB Cable + Adapter
3	PCS1900 Idle + Bluetooth Idle + WLAN (5G) Idle + Camera + Earphone + Battery 20% + USB Cable + Adapter
4	WCDMA850 Idle + Bluetooth Idle + WLAN (2.4G) Idle + MPEG4 + Earphone + Battery 20% + USB Cable + Adapter
5	GSM850 Idle + Bluetooth Idle + WLAN (5G) Idle + SD Card R/W + Earphone + Battery 20% + USB Cable (Data Link with Notebook)
For **Pretest mode 5** is the worst case and only its data was record in this test report.	

The Determined Worst Case Configurations	
Conducted Emissions	
Test Mode	**Operating Description**
1	GSM850 Idle + Bluetooth Idle + WLAN (2.4G) Idle + GPS Rx + Earphone + Battery 20% + USB Cable + Adapter
Radiated Emissions	
Test Mode ≤1GHz	**Operating Description**
1	GSM850 Idle + Bluetooth Idle + WLAN (5G) Idle + SD Card R/W + Earphone + Battery 20% + USB Cable (Data Link with Notebook)
Test Mode >1GHz	**Operating Description**
1	GSM850 Idle + Bluetooth Idle + WLAN (5G) Idle + SD Card R/W + Earphone + Battery 20% + USB Cable (Data Link with Notebook)

2.3 Local Support Equipment List

Support Equipment List					
No.	**Equipment**	**Brand**	**Model**	**S/N**	**Signal cable / Length (m)**
1	Adapter	NTT docomo	AC Adaptor 05	---	1.2m non-shielded with 2 cores
2	Radio Communication Analyzer	R&S	CMU200	108087	---
3	GPS Station (MXG)	Agilent	N5182B	MY53050081	---
4	Earphone	APPLE	MD827FE/A	6	1.2m non-shielded w/o core
5	AP	D-LINK	DIR-815	3000228	---
6	BT speaker	Nokia	HF-34W	---	---
7	Micro SD card	SanDisk	Micro SDHC 8GB	---	---
8	Notebook	DELL	Latitude E5430	764RWW1	
9	Printer	EPSON	XP-30	QSDK002410	USB, 1.8m shielded w/o core
10	Mouse	DELL	MS111-L	2C3-00N9	USB, 1.8m shielded w/o core
11	HDD	WD	WDBKXH5000 ABK	WX31AB2102 13	USB, 0.5m shielded w/o core

Note: Item 1 was provided by client.

2.4 Test Setup Chart

Test Setup Diagram (for Conducted Emissions)

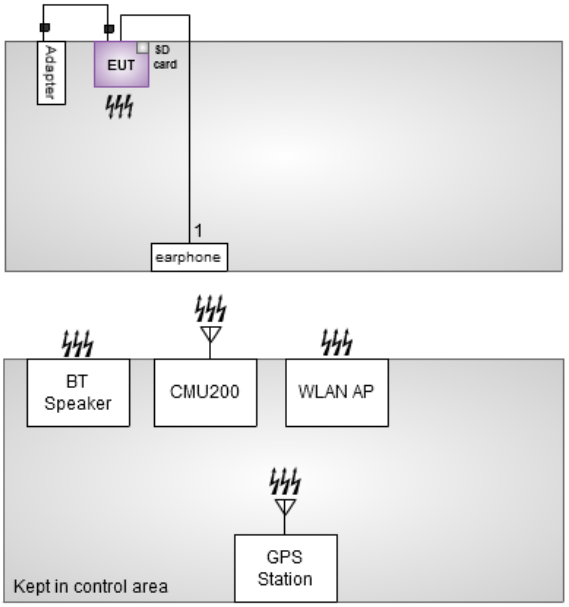

1. 1.2m non-shielded

Test Setup Diagram (for Radiated Emissions)

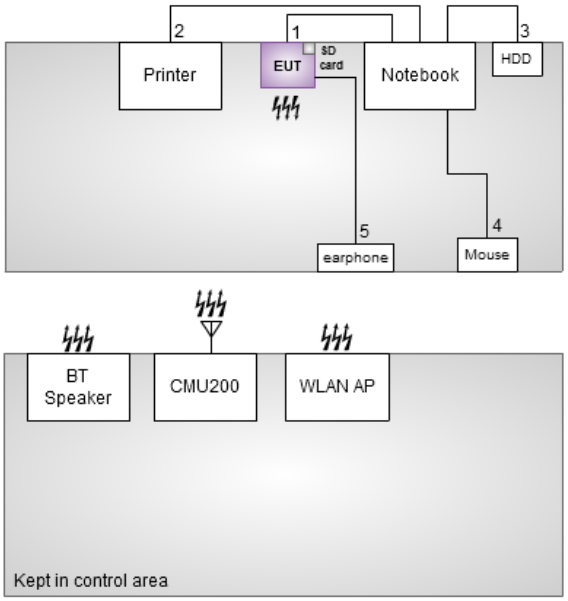

1. USB, 1.2m shielded
2. USB, 1.8m shielded
3. USB, 0.5 shielded
4. USB, 1.8m shielded
5. 1.2m non-shielded

2.5 Test Software and Operating Condition

a. The EUT was in GSM idle mode during the testing. The EUT was synchronized to the BCCH.
b. The EUT was attached to the support BT speaker or WLAN AP in idle mode.
c. Executed “GPS Test” to make the EUT receive continuous signals from GPS station.
d. Data application is transferred between notebook, SD Card, HDD and EUT via USB cable.

3 Emission Tests Results

3.1 Conducted Emissions

3.1.1 Limit of Conducted Emissions

Conducted Emissions Limit		
Frequency Emission (MHz)	**Quasi-Peak**	**Average**
0.15-0.5	66 - 56 *	56 - 46 *
0.5-5	56	46
5-30	60	50
Note 1: * Decreases with the logarithm of the frequency.		

3.1.2 Test Procedures

a. The device is placed on a test table, raised 80 cm above the reference ground plane. The vertical conducting plane is located 40 cm to the rear of the device.

b. The device is connected to line impedance stabilization network (LISN) and other accessories are connected to other LISN. Measured levels of AC power line conducted emission are across the 50 Ω LISN port.

c. AC conducted emission measurements is made over frequency range from 150 kHz to 30 MHz.

3.1.3 Test Setup

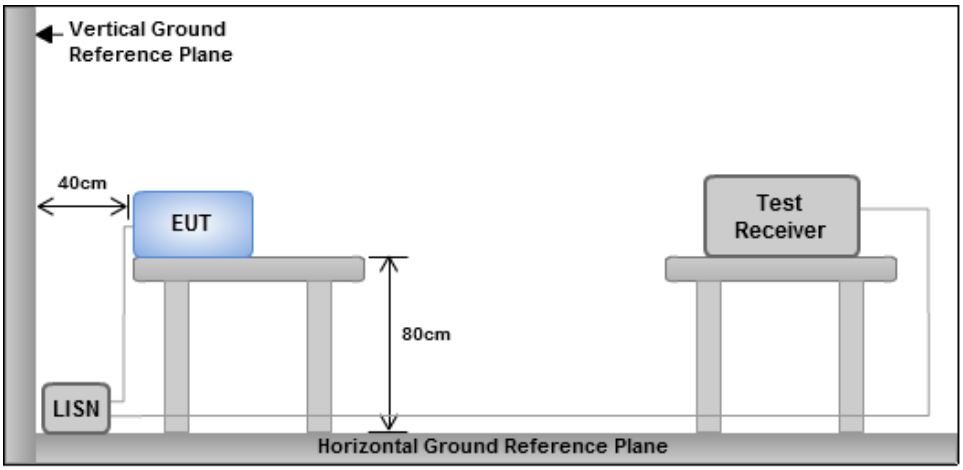

Note: 1. Support units were connected to second LISN.
2. Both of LISNs (AMN) are 80 cm from EUT and at least 80 cm from other units and other metal planes

3.1.4 Test Result of Conducted Emissions

Power Phase	Line	Test Mode	1

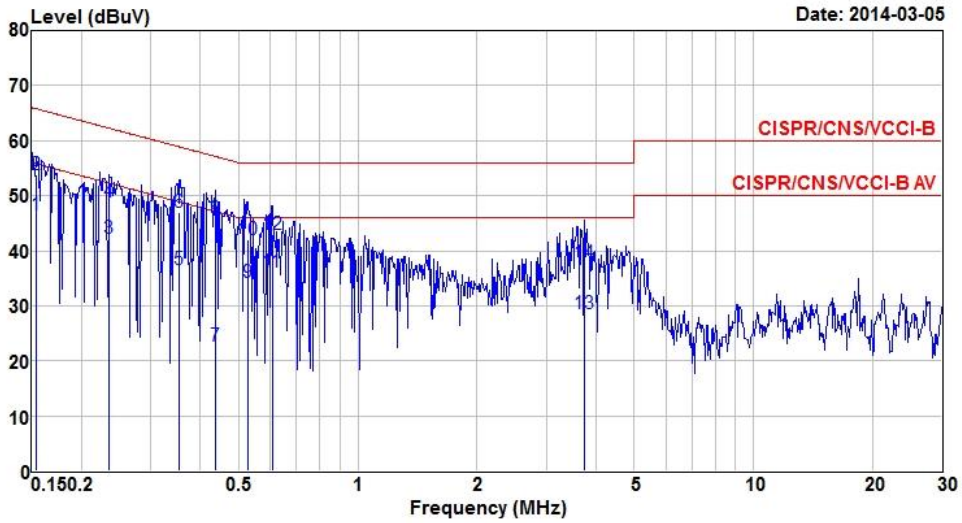

	Freq MHz	Level dBuV	Limit Line dBuV	Over Limit dB	Read Level dBuV	LISN factor dB	cable loss dB	Remark
1*	0.154	46.43	55.78	-9.35	45.95	0.41	0.07	Average
2	0.154	53.89	65.78	-11.89	53.41	0.41	0.07	QP
3	0.235	42.19	52.26	-10.07	41.59	0.45	0.15	Average
4	0.235	48.81	62.26	-13.45	48.21	0.45	0.15	QP
5	0.354	36.59	48.87	-12.28	36.01	0.51	0.07	Average
6	0.354	46.94	58.87	-11.93	46.36	0.51	0.07	QP
7	0.435	22.77	47.15	-24.38	22.17	0.55	0.05	Average
8	0.435	45.73	57.15	-11.42	45.13	0.55	0.05	QP
9	0.527	34.26	46.00	-11.74	33.62	0.59	0.05	Average
10	0.527	42.05	56.00	-13.95	41.41	0.59	0.05	QP
11	0.608	36.16	46.00	-9.84	35.49	0.62	0.05	Average
12	0.608	42.95	56.00	-13.05	42.28	0.62	0.05	QP
13	3.740	28.52	46.00	-17.48	27.23	1.06	0.23	Average
14	3.740	37.67	56.00	-18.33	36.38	1.06	0.23	QP

Note 1: Level (dBuV) = Read Level (dBuV) + LISN Factor (dB) + Cable Loss (dB).
2: Over Limit (dBuV) = Level (dBuV) – Limit Line (dBuV).

Power Phase	Neutral	Test Mode	1

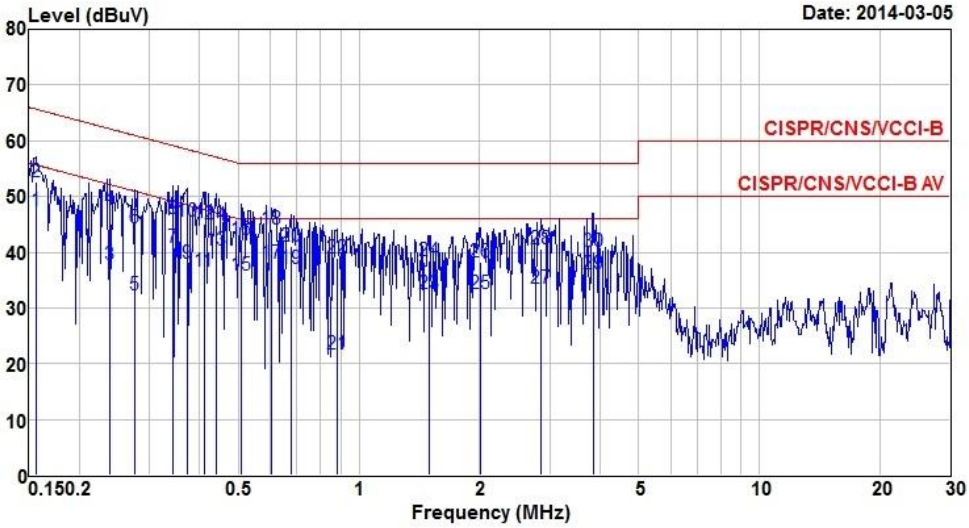

	Freq MHz	Level dBuV	Limit Line dBuV	Over Limit dB	Read Level dBuV	LISN factor dB	cable loss dB	Remark
1	0.156	47.39	55.69	-8.30	46.83	0.49	0.07	Average
2	0.156	52.61	65.69	-13.08	52.05	0.49	0.07	QP
3	0.239	37.68	52.13	-14.45	36.99	0.54	0.15	Average
4	0.239	47.60	62.13	-14.53	46.91	0.54	0.15	QP
5	0.276	32.40	50.94	-18.54	31.72	0.56	0.12	Average
6	0.276	44.47	60.94	-16.47	43.79	0.56	0.12	QP
7	0.343	40.90	49.13	-8.23	40.23	0.59	0.08	Average
8	0.343	46.02	59.13	-13.11	45.35	0.59	0.08	QP
9	0.371	38.06	48.47	-10.41	37.40	0.60	0.06	Average
10	0.371	45.62	58.47	-12.85	44.96	0.60	0.06	QP
11	0.410	36.69	47.64	-10.95	36.02	0.62	0.05	Average
12	0.410	45.16	57.64	-12.48	44.49	0.62	0.05	QP
13*	0.440	40.47	47.07	-6.60	39.79	0.63	0.05	Average
14	0.440	44.89	57.07	-12.18	44.21	0.63	0.05	QP
15	0.507	35.83	46.00	-10.17	35.12	0.66	0.05	Average
16	0.507	42.34	56.00	-13.66	41.63	0.66	0.05	QP
17	0.604	37.95	46.00	-8.05	37.20	0.70	0.05	Average
18	0.604	44.08	56.00	-11.92	43.33	0.70	0.05	QP
19	0.679	36.94	46.00	-9.06	36.18	0.72	0.04	Average
20	0.679	41.13	56.00	-14.87	40.37	0.72	0.04	QP
21	0.880	21.64	46.00	-24.36	20.83	0.77	0.04	Average
22	0.880	38.96	56.00	-17.04	38.15	0.77	0.04	QP
23	1.495	32.69	46.00	-13.31	31.61	0.97	0.11	Average
24	1.495	38.42	56.00	-17.58	37.34	0.97	0.11	QP
25	2.012	32.47	46.00	-13.53	31.22	1.09	0.16	Average
26	2.012	38.24	56.00	-17.76	36.99	1.09	0.16	QP
27	2.854	33.54	46.00	-12.46	32.23	1.11	0.20	Average
28	2.854	40.69	56.00	-15.31	39.38	1.11	0.20	QP
29	3.840	36.19	46.00	-9.81	34.82	1.13	0.24	Average
30	3.840	40.23	56.00	-15.77	38.86	1.13	0.24	QP

Note 1: Level (dBuV) = Read Level (dBuV) + LISN Factor (dB) + Cable Loss (dB).
2: Over Limit (dBuV) = Level (dBuV) – Limit Line (dBuV).

3.2 Radiated Emissions

3.2.1 Limit of Radiated Emissions

According to FCC Part 15, Subpart B §15.109, the field strength of radiated emissions from unintentional radiators at a distance of 3 meters shall not exceed the following values:

Frequency of Emission (MHz)	Field Strength (uV/m)	Field Strength (dBuV/m)	Measure Distance (m)
30 - 88	100	40	3
88 - 216	150	43.5	3
216 - 960	200	46	3
Above 960	500	54	3

Highest frequency generated or used in the device or on which the device operates or tunes (MHz)	Upper frequency of measurement range (MHz)
Below 1.705	30
1.705-108	1000
108-500	2000
500-1000	5000
Above 1000	5th harmonic of the highest frequency or 40 GHz, whichever is lower

Note: According to FCC Part 15, Subpart B §15.33: For an unintentional radiator is shown in the table above.

3.2.2 Test Procedures

1. Measurement is made at a semi-anechoic chamber that incorporates a turntable allowing a EUT rotation of 360°. A continuously-rotating, remotely-controlled turntable is installed at the test site to support the EUT and facilitate determination of the direction of maximum radiation for each EUT emission frequency. The EUT is placed at a height of 0.8 m test table above the ground plane.
2. Measurement is made with the antenna positioned in both the horizontal and vertical planes of polarization. The measurement antenna is varied in height (1m ~ 4m) above the reference ground plane to obtain the maximum signal strength. Distance between EUT and antenna is 3 m.
3. This investigation is performed with the EUT rotated 360°, the antenna height scanned between 1 m and 4 m, and the antenna rotated to repeat the measurements for both the horizontal and vertical antenna polarizations.

Note:

1. 120kHz measurement bandwidth of test receiver and Quasi-peak detector is for radiated emission below 1GHz.
2. RBW=1MHz, VBW=3MHz and Peak detector is for peak measured value of radiated emission above 1GHz.
3. RBW=1MHz, VBW=3MHz and RMS detector is for average measured value of radiated emission above 1GHz.

3.2.3 Test Setup

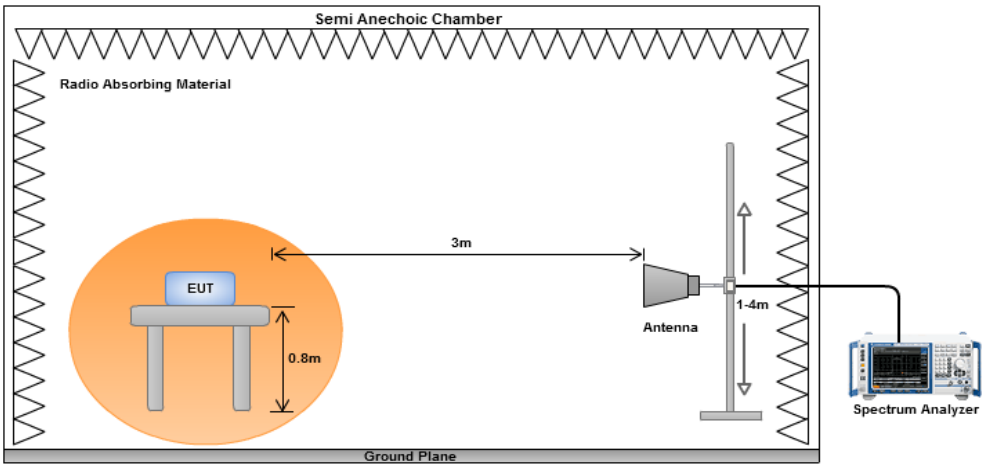

3.2.4 Radiated Emissions (Below 1GHz)

Polarization	Horizontal	Test Mode	1

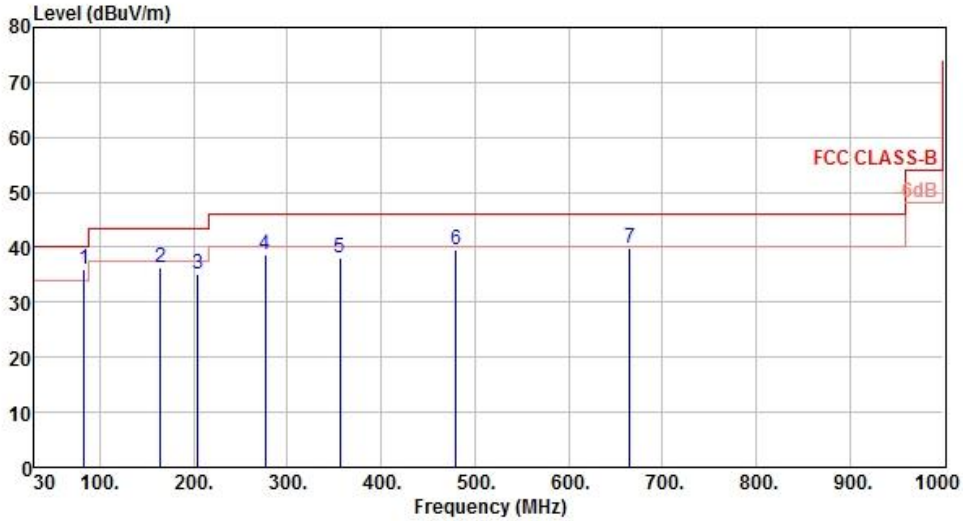

	Freq. MHz	Emission level dBuV/m	Limit dBuV/m	Margin dB	SA reading dBuV	Factor dB	Remark	ANT High cm	Turn Table deg
1	83.35	35.98	40.00	-4.02	58.06	-22.08	Peak	---	---
2	164.83	36.26	43.50	-7.24	53.37	-17.11	Peak	---	---
3	204.60	35.21	43.50	-8.29	54.86	-19.65	Peak	---	---
4	276.38	38.57	46.00	-7.43	55.38	-16.81	Peak	---	---
5	355.92	38.07	46.00	-7.93	52.97	-14.90	Peak	---	---
6	480.08	39.52	46.00	-6.48	51.46	-11.94	Peak	---	---
7	665.35	39.88	46.00	-6.12	48.53	-8.65	Peak	---	---

Note 1: Level (dBuV/m) = Read Level (dBuV/m) + Antenna Factor (dB) + Cable Loss (dB) - Preamp Factor (dB).
2: Over Limit (dBuV/m) = Limit Line (dBuV/m) – Level (dBuV/m).

Polarization	Vertical	Test Mode	1

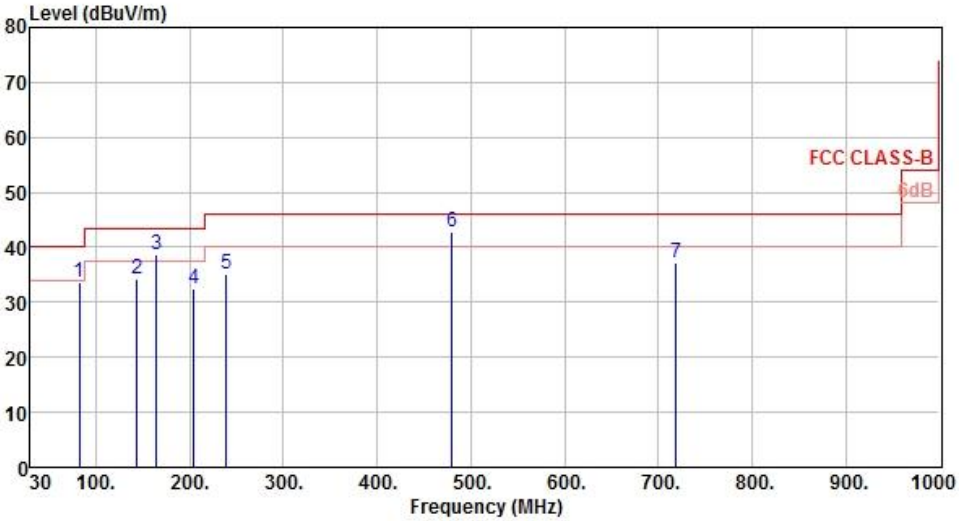

	Freq. MHz	Emission level dBuV/m	Limit dBuV/m	Margin dB	SA reading dBuV	Factor dB	Remark	ANT High cm	Turn Table deg
1	82.38	33.55	40.00	-6.45	55.50	-21.95	Peak	---	---
2	143.49	34.19	43.50	-9.31	51.29	-17.10	Peak	---	---
3	164.83	38.78	43.50	-4.72	55.89	-17.11	Peak	---	---
4	204.60	32.48	43.50	-11.02	52.13	-19.65	Peak	---	---
5	239.52	35.22	46.00	-10.78	53.39	-18.17	Peak	---	---
6	480.08	42.72	46.00	-3.28	54.66	-11.94	Peak	---	---
7	718.70	37.12	46.00	-8.88	44.99	-7.87	Peak	---	---

Note 1: Level (dBuV/m) = Read Level (dBuV/m) + Antenna Factor (dB) + Cable Loss (dB) - Preamp Factor (dB).
2: Over Limit (dBuV/m) = Limit Line (dBuV/m) – Level (dBuV/m).

3.2.5 Radiated Emissions (Above 1GHz)

Polarization	Horizontal	Test Mode	1

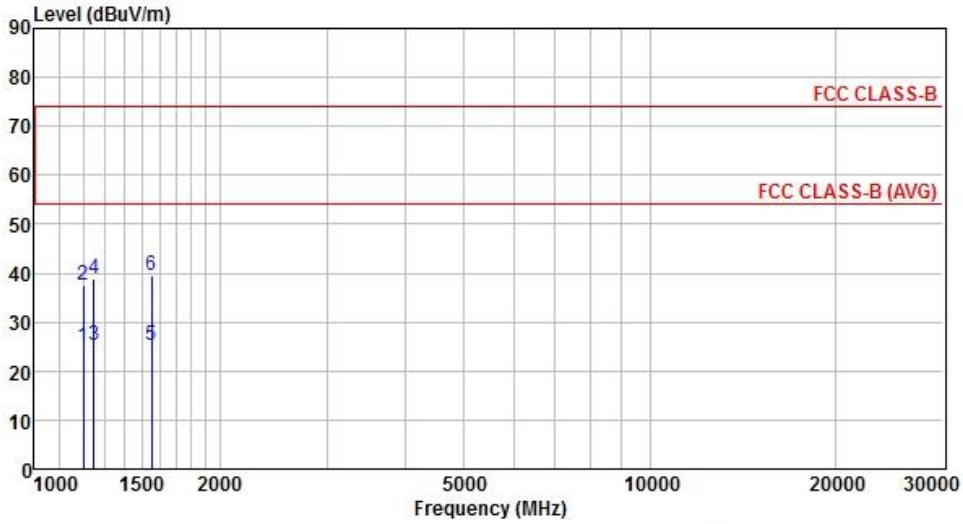

	Freq. MHz	Emission level dBuV/m	Limit dBuV/m	Margin dB	SA reading dBuV	Factor dB	Remark	ANT High cm	Turn Table deg
1	1202.00	25.06	54.00	-28.94	33.51	-8.45	Average	100	133
2	1202.00	37.67	74.00	-36.33	46.12	-8.45	Peak	100	133
3	1251.00	25.12	54.00	-28.88	33.25	-8.13	Average	100	138
4	1251.00	38.80	74.00	-35.20	46.93	-8.13	Peak	100	138
5	1550.00	25.08	54.00	-28.92	31.35	-6.27	Average	100	63
6	1550.00	39.47	74.00	-34.53	45.74	-6.27	Peak	100	63

Note 1: Level (dBuV/m) = Read Level (dBuV/m) + Antenna Factor (dB) + Cable Loss (dB) - Preamp Factor (dB).
2: Over Limit (dBuV/m) = Limit Line (dBuV/m) – Level (dBuV/m).

Polarization	Vertical	Test Mode	1

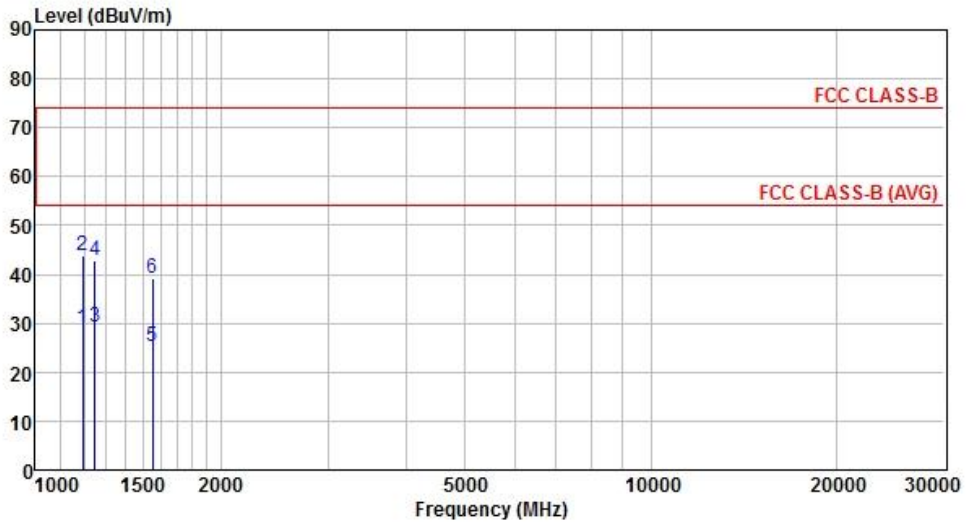

	Freq. MHz	Emission level dBuV/m	Limit dBuV/m	Margin dB	SA reading dBuV	Factor dB	Remark	ANT High cm	Turn Table deg
1	1194.00	28.85	54.00	-25.15	37.34	-8.49	Average	100	135
2	1194.00	43.77	74.00	-30.23	52.26	-8.49	Peak	100	135
3	1250.00	29.28	54.00	-24.72	37.42	-8.14	Average	100	74
4	1250.00	42.83	74.00	-31.17	50.97	-8.14	Peak	100	74
5	1550.00	25.32	54.00	-28.68	31.59	-6.27	Average	100	269
6	1550.00	39.11	74.00	-34.89	45.38	-6.27	Peak	100	269

Note 1: Level (dBuV/m) = Read Level (dBuV/m) + Antenna Factor (dB) + Cable Loss (dB) - Preamp Factor (dB).
2: Over Limit (dBuV/m) = Limit Line (dBuV/m) – Level (dBuV/m).

4 Test laboratory information

Established in 2012, ICC provides foremost EMC & RF Testing and advisory consultation services by our skilled engineers and technicians. Our services employ a wide variety of advanced edge test equipment and one of the widest certification extents in the business.

International Certification Corp, it is our definitive objective is to institute long term, trust-based associations with our clients. The expectation we set up with our clients is based on outstanding service, practical expertise and devotion to a certified value structure. Our passion is to grant our clients with best EMC / RF services by oriented knowledgeable and accommodating staff.

Our Test sites are located at Linkou District and Kwei Shan Hsiang. Location map can be found on our website http://www.icertifi.com.tw.

Linkou

Tel: 886-2-2601-1640

No. 30-2, Ding Fwu Tsuen, Lin Kou District, New Taipei City, Taiwan, R.O.C.

Kwei Shan

Tel: 886-3-271-8666

No. 3-1, Lane 6, Wen San 3rd St., Kwei Shan Hsiang, Tao Yuan Hsien 333, Taiwan, R.O.C.

If you have any suggestion, please feel free to contact us as below information

Tel: 886-3-271-8666
Fax: 886-3-318-0155
Email: ICC_Service@icertifi.com.tw

═END═