FCC TEST REPORT

(PART 22)

REPORT NO.: RF110711C24-2

MODEL NO.: F-01D

FCC ID: VQK-F01D

RECEIVED: Jul. 11, 2011

TESTED: Aug. 12 ~ Aug. 17, 2011

ISSUED: Aug. 18, 2011

APPLICANT: FUJITSU LIMITED

ADDRESS: 1-1, Kamikodanaka 4-chome, Nakahara-ku, Kawasaki 211-8588, Japan

ISSUED BY: Bureau Veritas Consumer Products Services (H.K.) Ltd., Taoyuan Branch

LAB ADDRESS: No. 47, 14th Ling, Chia Pau Tsuen, Lin Kou Hsiang, Taipei Hsien 244, Taiwan, R.O.C.

TEST LOCATION: No. 19, Hwa Ya 2nd Rd, Wen Hwa Tsuen, Kwei Shan Hsiang, Taoyuan Hsien 333, Taiwan, R.O.C.

This test report consists of 52 pages in total. It may be duplicated completely for legal use with the approval of the applicant. It should not be reproduced except in full, without the written approval of our laboratory. The client should not use it to claim product endorsement by TAF or any government agencies. The test results in the report only apply to the tested sample.

TABLE OF CONTENTS

RELEASE CONTROL RECORD 4
1 CERTIFICATION 5
2 SUMMARY OF TEST RESULTS 6
2.1 MEASUREMENT UNCERTAINTY 6
3 GENERAL INFORMATION 7
3.1 GENERAL DESCRIPTION OF EUT 7
3.2 DESCRIPTION OF TEST MODES 8
3.2.1 CONFIGURATION OF SYSTEM UNDER TEST 8
3.2.2 TEST MODE APPLICABILITY AND TESTED CHANNEL DETAIL 9
3.3 GENERAL DESCRIPTION OF APPLIED STANDARDS 11
3.4 DESCRIPTION OF SUPPORT UNITS 11
4 TEST TYPES AND RESULTS 12
4.1 OUTPUT POWER MEASUREMENT 12
4.1.1 LIMITS OF OUTPUT POWER MEASUREMENT 12
4.1.2 TEST INSTRUMENTS 13
4.1.3 TEST PROCEDURES 14
4.1.4 TEST SETUP 15
4.1.5 EUT OPERATING CONDITIONS 15
4.1.6 TEST RESULTS 16
4.2 FREQUENCY STABILITY MEASUREMENT 18
4.2.1 LIMITS OF FREQUENCY STABILIITY MEASUREMENT 18
4.2.2 TEST INSTRUMENTS 18
4.2.3 TEST PROCEDURE 19
4.2.4 TEST SETUP 19
4.2.5 TEST RESULTS 20
4.3 OCCUPIED BANDWIDTH MEASUREMENT 21
4.3.1 LIMITS OF OCCUPIED BANDWIDTH MEASUREMENT 21
4.3.2 TEST INSTRUMENTS 21
4.3.3 TEST SETUP 21
4.3.4 TEST PROCEDURES 22
4.3.5 EUT OPERATING CONDITION 22
4.3.6 TEST RESULTS 23
4.4 BAND EDGE MEASUREMENT 25
4.4.1 LIMITS OF BAND EDGE MEASUREMENT 25
4.4.2 TEST INSTRUMENTS 25
4.4.3 TEST SETUP 25
4.4.4 TEST PROCEDURES 26
4.4.5 EUT OPERATING CONDITION 26
4.4.6 TEST RESULTS 27
4.5 CONDUCTED SPURIOUS EMISSIONS 29
4.5.1 LIMITS OF CONDUCTED SPURIOUS EMISSIONS MEASUREMENT 29
4.5.2 TEST INSTRUMENTS 29
4.5.3 TEST PROCEDURE 30
4.5.4 TEST SETUP 30
4.5.5 EUT OPERATING CONDITIONS 30
4.5.6 TEST RESULTS 31
4.6 RADIATED EMISSION MEASUREMENT (BELOW 1GHz) 37
4.6.1 LIMITS OF RADIATED EMISSION MEASUREMENT 37
4.6.2 TEST INSTRUMENTS 37
4.6.3 TEST PROCEDURES 38

4.6.4 DEVIATION FROM TEST STANDARD 38
4.6.5 TEST SETUP.....39
4.6.6 EUT OPERATING CONDITIONS 39
4.6.7 TEST RESULTS 40
5 PHOTOGRAPHS OF THE TEST CONFIGURATION.....50
6 INFORMATION ON THE TESTING LABORATORIES 51
7 APPENDIX A – MODIFICATIONS RECORDERS FOR ENGINEERING CHANGES TO THE EUT BY THE LAB.....52

RELEASE CONTROL RECORD

ISSUE NO.	REASON FOR CHANGE	DATE ISSUED
Original release	N/A	Aug. 18, 2011

1 CERTIFICATION

PRODUCT: Tablet PC
MODEL: F-01D
BRAND: FOMA
APPLICANT: FUJITSU LIMITED
TESTED: Aug. 12 ~ Aug. 17, 2011
TEST SAMPLE: ENGINEERING SAMPLE
STANDARDS : FCC Part 22, Subpart H
ANSI C63.4-2003

The above equipment (model: F-01D) has been tested by **Bureau Veritas Consumer Products Services (H.K.) Ltd., Taoyuan Branch,** and found compliance with the requirement of the above standards. The test record, data evaluation & Equipment Under Test (EUT) configurations represented herein are true and accurate accounts of the measurements of the sample's EMC characteristics under the conditions specified in this report.

PREPARED BY : Andrea Hsia / Specialist **DATE:** Aug. 18, 2011

APPROVED BY : Gary Chang / Technical Manager , **DATE:** Aug. 18, 2011

2 SUMMARY OF TEST RESULTS

The EUT has been tested according to the following specifications:

APPLIED STANDARD: FCC Part 22 & Part 2			
STANDARD SECTION	**TEST TYPE AND LIMIT**	**RESULT**	**REMARK**
2.1046 22.913 (a)	Maximum Peak Output Power Limit: max. 7 watts e.i.r.p peak power	PASS	Meet the requirement of limit. Max. e.r.p is 16.6dBm at 846.6MHz.
2.1055	Frequency Stability AFC Freq. Error vs. Voltage AFC Freq. Error vs. Temperature Limit: max. ±2.5ppm	PASS	Meet the requirement of limit.
2.1049 (h)	Occupied Bandwidth	PASS	Meet the requirement of limit.
22.917	Band Edge Measurements	PASS	Meet the requirement of limit.
2.1051 22.917	Conducted Spurious Emissions	PASS	Meet the requirement of limit.
2.1053 22.917	Radiated Spurious Emissions	PASS	Meet the requirement of limit. Minimum passing margin is –28.9dB at 106.56MHz.

2.1 MEASUREMENT UNCERTAINTY

Where relevant, the following measurement uncertainty levels have been estimated for tests performed on the EUT as specified in CISPR 16-4-2:

MEASUREMENT	FREQUENCY	UNCERTAINTY
Conducted emissions	9kHz~30MHz	2.44 dB
Radiated emissions	30MHz ~ 200MHz	3.34 dB
	200MHz ~1000MHz	3.35 dB
	1GHz ~ 18GHz	2.26 dB
	18GHz ~ 40GHz	1.94 dB

This uncertainty represents an expanded uncertainty expressed at approximately the 95% confidence level using a coverage factor of k=2.

3 GENERAL INFORMATION

3.1 GENERAL DESCRIPTION OF EUT

EUT	Tablet PC
MODEL NO.	F-01D
FCC ID	VQK-F01D
POWER SUPPLY	3.7Vdc (Li-ion battery) 5.0Vdc (Adapter)
MODULATION TYPE	BPSK
FREQUENCY RANGE	826.4MHz ~ 846.6MHz
MAX. ERP POWER	0.0452Watts
WCDMA RELEASE VERSION	5
ANTENNA TYPE	λ/4 Monopole antenna with -5.0dBi gain
I/O PORTS	Refer to user's manual
DATA CABLE	NA
ACCESSORY DEVICES	Adapter

NOTE:

1. The EUT use the following internal Li-ion battery:

RATING	3.7Vdc, 6560mAh

2. The EUT use the following Adapter:

ADAPTER	
BRAND	NTT docomo
MODEL	F05
INPUT	110-240Vac~ 50/60Hz 0.22A
OUTPUT	5Vdc, 1.6A
POWER LINE	DC: 0.65m non-shield without core AC: 1.0m non-shield without core

3. The following accessory is for support units only.

PRODUCT	BRAND	DESCRIPTION
USB cable	NA	0.8m non-shielded cable without core

4. Hardware version: V2.1.0.
5. Software version: R14.3.
6. IMEI Code: 357623040012195 & 357623040013656.
7. The above EUT information was declared by manufacturer and for more detailed features description, please refer to the manufacturer's specifications or User's Manual.

3.2 DESCRIPTION OF TEST MODES

102 channels are provided to this EUT. Therefore, the low, middle and high channels are chosen for testing.

	CHANNEL	FREQUENCY	TX MODE
LOW	4132	826.4 MHz	WCDMA, HSDPA
MIDDLE	4182	836.4 MHz	WCDMA, HSDPA
HIGH	4233	846.6 MHz	WCDMA, HSDPA

NOTE:

1. Below 1 GHz, the channel 4132, 4182 and 4233 were pre-tested in chamber. The channel 4233 was chosen for final test.
2. Above 1 GHz, the channel 4132, 4182 and 4233 were tested individually.
3. The channel space is 0.2MHz.
4. After pretest of output power and spurious emission under WCDMA-RMC & HSDPA mode, find the worst mode is WCDMA-RMC. Therefore, select WCDMA-RMC mode to do final test

3.2.1 CONFIGURATION OF SYSTEM UNDER TEST

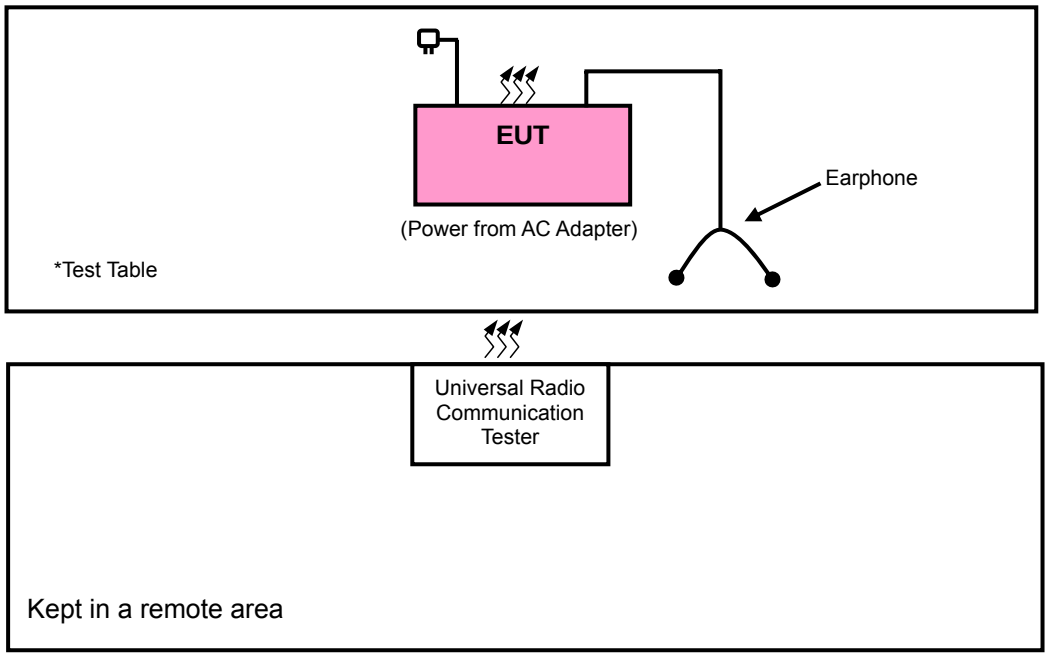

3.2.2 TEST MODE APPLICABILITY AND TESTED CHANNEL DETAIL

EUT CONFIGURE MODE	APPLICABLE TO							DESCRIPTION
	OP	FS	OB	BE	CE	RE<1G	RE≥1G	
-	√	√	√	√	√	√	√	-

Where **OP:** Output power **FS:** Frequency stability
OB: Occupied bandwidth **BE:** Band edge
CE: Conducted spurious emissions **RE<1G:** Radiated emission below 1GHz
RE≥1G: Radiated emission above 1GHz

OUTPUT POWER MEASUREMENT:

☒ Pre-Scan has been conducted to determine the worst-case mode from all possible combinations between available modulations, data rates, XYZ axis and antenna ports (if EUT with antenna diversity architecture).
☒ Following channel(s) was (were) selected for the final test as listed below.

AVAILABLE CHANNEL	TESTED CHANNEL	MODULATION TECHNOLOGY	AXIS
4132 to 4233	4132, 4182, 4233	WCDMA	X, Y, Z
4132 to 4233	4233	HSDPA	X, Y, Z

FREQUENCY STABILITY MEASUREMENT:

☒ Pre-Scan has been conducted to determine the worst-case mode from all possible combinations between available modulations and antenna ports (if EUT with antenna diversity architecture).
☒ Following channel(s) was (were) selected for the final test as listed below.

AVAILABLE CHANNEL	TESTED CHANNEL	MODULATION TECHNOLOGY
4132 to 4233	4233	WCDMA

OCCUPIED BANDWIDTH MEASUREMENT:

☒ This item includes all test value of each mode, but only includes spectrum plot of worst value of each mode.
☒ Pre-Scan has been conducted to determine the worst-case mode from all possible combinations between available modulations and antenna ports (if EUT with antenna diversity architecture).
☒ Following channel(s) was (were) selected for the final test as listed below.

AVAILABLE CHANNEL	TESTED CHANNEL	MODULATION TECHNOLOGY
4132 to 4233	4132, 4182, 4233	WCDMA, HSDPA

BAND EDGE MEASUREMENT:

☒ Pre-Scan has been conducted to determine the worst-case mode from all possible combinations between available modulations and antenna ports (if EUT with antenna diversity architecture).
☒ Following channel(s) was (were) selected for the final test as listed below.

AVAILABLE CHANNEL	TESTED CHANNEL	MODULATION TECHNOLOGY
4132 to 4233	4132, 4233	WCDMA, HSDPA

CONDUCTED SPURIOUS EMISSIONS MEASUREMENT:

☒ Pre-Scan has been conducted to determine the worst-case mode from all possible combinations between available modulations and antenna ports (if EUT with antenna diversity architecture).
☒ Following channel(s) was (were) selected for the final test as listed below.

AVAILABLE CHANNEL	TESTED CHANNEL	MODULATION TECHNOLOGY
4132 to 4233	4132, 4182, 4233	WCDMA

RADIATED EMISSION MEASUREMENT (BELOW 1 GHz):

☒ Pre-Scan has been conducted to determine the worst-case mode from all possible combinations between available modulations, data rates, XYZ axis and antenna ports (if EUT with antenna diversity architecture).
☒ Following channel(s) was (were) selected for the final test as listed below.

AVAILABLE CHANNEL	TESTED CHANNEL	MODULATION TECHNOLOGY	AXIS
4132 to 4233	4233	WCDMA, HSDPA	X, Y, Z

RADIATED EMISSION MEASUREMENT (ABOVE 1 GHz):

☒ Pre-Scan has been conducted to determine the worst-case mode from all possible combinations between available modulations, data rates, XYZ axis and antenna ports (if EUT with antenna diversity architecture).
☒ Following channel(s) was (were) selected for the final test as listed below.

AVAILABLE CHANNEL	TESTED CHANNEL	MODULATION TECHNOLOGY	AXIS
4132 to 4233	4132, 4182, 4233	WCDMA	X, Y, Z
4132 to 4233	4233	HSDPA	X, Y, Z

TEST CONDITION:

APPLICABLE TO	ENVIRONMENTAL CONDITIONS	INPUT POWER	TESTED BY
OP	25deg. C, 65%RH	120Vac, 60Hz	Brad Wu
FS	25deg. C, 65%RH	120Vac, 60Hz	Brad Wu
OB	25deg. C, 65%RH	120Vac, 60Hz	Brad Wu
EM	25deg. C, 65%RH	120Vac, 60Hz	Brad Wu
BE	25deg. C, 65%RH	120Vac, 60Hz	Brad Wu
CE	25deg. C, 65%RH	120Vac, 60Hz	Brad Wu
RE < 1G	25deg. C, 65%RH	120Vac, 60Hz	Brad Wu
RE ≥ 1G	25deg. C, 65%RH	120Vac, 60Hz	Brad Wu

3.3 GENERAL DESCRIPTION OF APPLIED STANDARDS

The EUT is a RF product. According to the specifications of the manufacturer, it must comply with the requirements of the following standards:

FCC 47 CFR Part 2

FCC 47 CFR Part 22

ANSI C63.4-2003

ANSI/TIA/EIA-603-C 2004

NOTE: All test items have been performed and recorded as per the above standards.

3.4 DESCRIPTION OF SUPPORT UNITS

The EUT has been tested as an independent unit together with other necessary accessories or support units. The following support units or accessories were used to form a representative test configuration during the tests.

NO.	PRODUCT	BRAND	MODEL NO.	SERIAL NO.	FCC ID
1	EARPHONE	PHILIPS	SBC HL125	NA	NA
2	UNIVERSAL RADIO COMMUNICATION TESTER	R&S	CMU200	104484	NA

NO.	SIGNAL CABLE DESCRIPTION OF THE ABOVE SUPPORT UNITS
1	1.2 m wrapped shielded wire, terminated with 3.5mm phone plug via drain wire, w/o core.
2	NA

NOTE 1: All power cords of the above support units are non shielded (1.8m).

NOTE 2: Item 2 acted as a communication partners to transfer data.

4 TEST TYPES AND RESULTS

4.1 OUTPUT POWER MEASUREMENT

4.1.1 LIMITS OF OUTPUT POWER MEASUREMENT

The radiated peak output power shall be according to the specific rule Part 22.913 (a) that “Mobile / Portable station are limited to 7 watts e.r.p”.

4.1.2 TEST INSTRUMENTS

DESCRIPTION & MANUFACTURER	MODEL NO.	SERIAL NO.	DATE OF CALIBRATION	DUE DATE OF CALIBRATION
Test Receiver ROHDE & SCHWARZ	ESIB7	100212	Aug. 02, 2011	Aug. 01, 2012
Spectrum Analyzer ROHDE & SCHWARZ	FSP 40	100041	Jul. 21, 2011	Jul. 20, 2012
BILOG Antenna SCHWARZBECK	VULB9168	9168-160	Apr. 13, 2011	Apr. 12, 2012
HORN Antenna SCHWARZBECK	9120D	9120D-405	Feb. 08, 2011	Feb. 07, 2012
HORN Antenna SCHWARZBECK	BBHA 9170	BBHA9170243	Dec. 27, 2010	Dec. 26, 2011
Preamplifier Agilent	8447D	2944A10633	Nov. 02, 2010	Nov. 01, 2011
Preamplifier Agilent	8449B	3008A01964	Nov. 02, 2010	Nov. 01, 2011
RF signal cable HUBER+SUHNNER	SUCOFLEX 104	295014/4	Sep. 03, 2010	Sep. 02, 2011
RF signal cable HUBER+SUHNNER	SUCOFLEX 104	12738/6	Sep. 03, 2010	Sep. 02, 2011
Software ADT.	ADT_Radiated_ V7.6.15.9.2	NA	NA	NA
Antenna Tower inn-co GmbH	MA 4000	013303	NA	NA
Antenna Tower Controller inn-co GmbH	CO2000	017303	NA	NA
Turn Table ADT.	TT100.	TT93021703	NA	NA
Turn Table Controller ADT.	SC100.	SC93021703	NA	NA

NOTE: 1. The calibration interval of the above test instruments is 12 months and the calibrations are traceable to NML/ROC and NIST/USA.

2. The test was performed in HwaYa Chamber 3.

3. The horn antenna and HP preamplifier (model: 8449B) are used only for the measurement of emission frequency above 1GHz if tested.

4. The FCC Site Registration No. is 988962.

5. The IC Site Registration No. is IC 7450F-3.

4.1.3 TEST PROCEDURES

EIRP / ERP MEASUREMENT:

a. The power was measured with R&S Spectrum Analyzer. All measurements were done at 3 channels 4132, 4182 and 4233 (WCDMA) (low, middle and high operational frequency range.) RWB and VBW is 5MHz.

b. Substitution method is used for E.I.R.P measurement. In the semi-anechoic chamber, EUT placed on the 0.8m height of Turn Table, rotated the table around 360 degrees to search the maximum radiation power and receiver antenna shall be rotated vertical and horizontal polarization and moved height from 1m to 4m to find the maximum polar radiated power. The " Read Value " is the spectrum reading the maximum power value.

c. The substitution horn antenna is substituted for EUT at the same position and signals generator export the CW signal to the substitution antenna via a tx cable . Rotated the Turn Table and moved receiving antenna to find the maximum radiation power. Adjust output power level of S.G to get a Value of spectrum reading equal to " Read Value " of step c. Record the power level of S.G

d. EIRP = Output power level of S.G – TX cable loss + Antenna gain of substitution horn.

e. E.R.P power can be calculated form E.I.R.P power by subtracting the gain of dipole, E.R.P power = E.I.P.R power - 2.15dBi.

CONDUCTED POWER MEASUREMENT:

a. The EUT was set up for the maximum power with WCDMA link data modulation and link up with simulator.
b. Set the EUT to transmit under low, middle and high channel and record the power level shown on simulator.

4.1.4 TEST SETUP

EIRP / ERP MEASUREMENT:

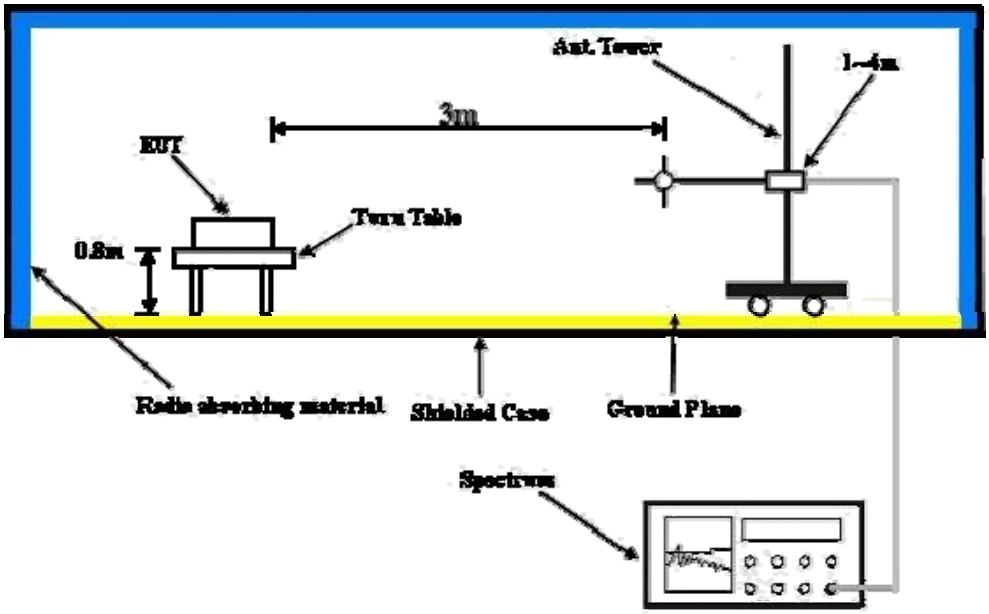

For the actual test configuration, please refer to the attached file (Test Setup Photo).

CONDUCTED POWER MEASUREMENT:

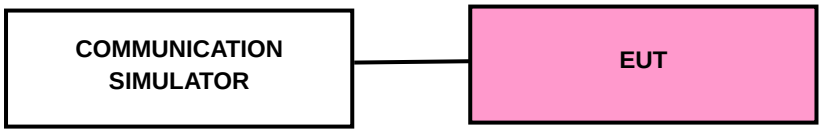

For the actual test configuration, please refer to the attached file (Test Setup Photo).

4.1.5 EUT OPERATING CONDITIONS

a. The EUT makes a call to the communication simulator.

b. The communication simulator station system controlled a EUT to export maximum output power under transmission mode and specific channel frequency.

4.1.6 TEST RESULTS

CONDUCTED OUTPUT POWER (dBm)

CH	FREQ.	WCDMA850	HSDPA			
		RMC	Subtest-1	Subtest-2	Subtest-3	Subtest-4
4132	826.4MHz	23.71	23.43	23.28	23.38	23.27
4182	836.4MHz	24.21	23.76	23.78	23.82	23.72
4233	846.6MHz	23.76	23.17	23.22	23.30	23.19

ERP POWER

WCDMA-RMC MODE

X-AXIS

CHANNEL NO.	FREQUENCY (MHz)	S.G VALUE (dBm)	CORRECTION FACTOR (dB)	OUTPUT POWER	
				dBm	Watt
4132	826.4	24.3	-8.6	15.7	0.0367
4182	836.4	24.2	-8.6	15.6	0.0359
4233	846.6	24.5	-8.7	15.8	0.0376

Y-AXIS

CHANNEL NO.	FREQUENCY (MHz)	S.G VALUE (dBm)	CORRECTION FACTOR (dB)	OUTPUT POWER	
				dBm	Watt
4132	826.4	22.2	-8.6	13.6	0.0226
4182	836.4	22.2	-8.6	13.6	0.0226
4233	846.6	22.6	-8.7	13.9	0.0243

Z-AXIS

CHANNEL NO.	FREQUENCY (MHz)	S.G VALUE (dBm)	CORRECTION FACTOR (dB)	OUTPUT POWER	
				dBm	Watt
4132	826.4	24.9	-8.6	16.3	0.0422
4182	836.4	25.0	-8.6	16.4	0.0432
4233	**846.6**	**25.3**	**-8.7**	**16.6**	**0.0452**

REMARKS: 1. Output Power (dBm) = S.G Value (dBm) + Correction Factor (dB).
2. Correction Factor (dB) = Substitution Antenna Gain (dB) + Cable Loss (dB).

HSDPA MODE

X-AXIS

CHANNEL NO.	FREQUENCY (MHz)	S.G VALUE (dBm)	CORRECTION FACTOR (dB)	OUTPUT POWER	
				dBm	Watt
4233	846.6	24.1	-8.6	15.5	0.0351

Y-AXIS

CHANNEL NO.	FREQUENCY (MHz)	S.G VALUE (dBm)	CORRECTION FACTOR (dB)	OUTPUT POWER	
				dBm	Watt
4233	846.6	22.0	-8.6	13.4	0.0216

Z-AXIS

CHANNEL NO.	FREQUENCY (MHz)	S.G VALUE (dBm)	CORRECTION FACTOR (dB)	OUTPUT POWER	
				dBm	Watt
4233	846.6	24.7	-8.6	16.1	0.0403

REMARKS: 1. Output Power (dBm) = S.G Value (dBm) + Correction Factor (dB).
2. Correction Factor (dB) = Substitution Antenna Gain (dB) + Cable Loss (dB).

4.2 FREQUENCY STABILITY MEASUREMENT

4.2.1 LIMITS OF FREQUENCY STABILIITY MEASUREMENT

According to the FCC part 22.863 shall be tested the frequency stability. The rule is defined that" The frequency stability shall be sufficient to ensure that the fundamental emission stays within the authorized frequency block." The frequency error rate is according to the JTC standard that the frequency error rate shall be accurate to within 2.5ppm of the received frequency from the base station. The test extreme voltage is according to the 2.1055(d)(1) Vary primary supply voltage from 85 to 115 percent of the nominal value for other than hand carried battery equipment and the extreme temperature rule is comply with the 2.1055(a)(1) –30℃~55℃.

4.2.2 TEST INSTRUMENTS

DESCRIPTION & MANUFACTURER	MODEL NO.	SERIAL NO.	CALIBRATED UNTIL	CALIBRATED UNTIL
Spectrum Analyzer Agilent	E4446A	MY43360128	Feb. 22, 2011	Feb. 21, 2012
Hewlett Packard RF cable	8120-6192	01428251	NA	NA
RF cable	SUCOFLEX 104	257029	Sep. 11, 2010	Sep. 10, 2011
WIT Standard Temperature & Humidity Chamber	MHU-225AU	920842	Jun. 15, 2011	Jun. 14, 2012

NOTE: The calibration interval of the above test instruments is 12 months. And the calibrations are traceable to NML/ROC and NIST/USA.

4.2.3 TEST PROCEDURE

a. Because of the measure the carrier frequency under the condition of the AFC lock, it shall be used the mobile station in the WCDMA link mode. This is accomplished with the use of the JRC NJZ-2000 simulator station. The oven room could control the temperatures and humidity. The link channel is the 4182.

b. Power must be removed when changing from one temperature to another or one voltage to another voltage. Power warm up is at least 15 min and power applied should perform before recording frequency error.

c. EUT is connected the external power supply to control the DC input power. The various Volts from the minimum 3.33Volts to 4.07Volts. Each step shall be record the frequency error rate.

d. The temperature range step is 10 degrees in this test items. All temperature levels shall be hold the ±0.5℃ during the measurement testing.

e. The each temperature step shall be at least 0.5 hours, consider the EUT could be test under the stability condition.

NOTE: The frequency error was recorded frequency error from the communication simulator.

4.2.4 TEST SETUP

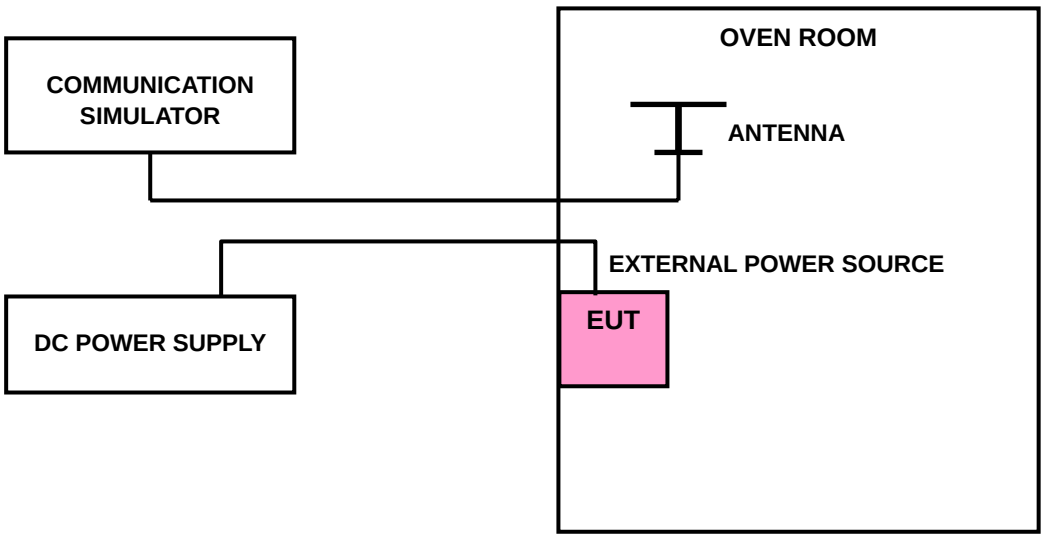

4.2.5 TEST RESULTS

AFC FREQUENCY ERROR vs. VOLTAGE			
VOLTAGE (Volts)	**FREQUENCY ERROR (Hz)**	**FREQUENCY ERROR (ppm)**	**LIMIT (ppm)**
4.07	-15	-0.018	2.5
3.33	-6	-0.007	2.5

NOTE: The applicant defined the normal working voltage of the battery is from 3.33Vdc to 4.07Vdc.

AFC FREQUENCY ERROR vs. TEMP.			
TEMP. (℃)	**FREQUENCY ERROR (Hz)**	**FREQUENCY ERROR (ppm)**	**LIMIT (ppm)**
55	-19	-0.023	2.5
50	-16	-0.019	2.5
40	-14	-0.017	2.5
30	-8	-0.010	2.5
20	-2	-0.002	2.5
10	1	0.001	2.5
0	3	0.004	2.5
-10	6	0.007	2.5
-20	8	0.010	2.5
-30	10	0.012	2.5

4.3 OCCUPIED BANDWIDTH MEASUREMENT

4.3.1 LIMITS OF OCCUPIED BANDWIDTH MEASUREMENT

The width of a frequency band such that, below the lower and above the upper frequency limits, the mean powers emitted are each equal to a specified percentage 0.5 %of the totalmean power of a given emission.

4.3.2 TEST INSTRUMENTS

DESCRIPTION & MANUFACTURER	MODEL NO.	SERIAL NO.	DATE OF CALIBRATION	DUE DATE OF CALIBRATION
SPECTRUM ANALYZER R&S	FSP40	100039	Jan. 11, 2011	Jan. 10, 2012
Mini-Circuits Power Splitter	ZN2PD-9G	NA	Mar. 24, 2011	Mar. 23, 2012
RF cable	SUCOFLEX 104	274403/4	Aug. 20, 2010	Aug. 19, 2011
RF cable	SUCOFLEX 104	250729/4	Aug. 19, 2010	Aug. 18, 2011
RF cable	SUCOFLEX 104	214377/4	Aug. 19, 2010	Aug. 18, 2011
JFW 20dB attenuation	50HF-020-SMA	NA	NA	NA

NOTE: The calibration interval of the above test instruments is 12 months. And the calibrations are traceable to NML/ROC and NIST/USA.

4.3.3 TEST SETUP

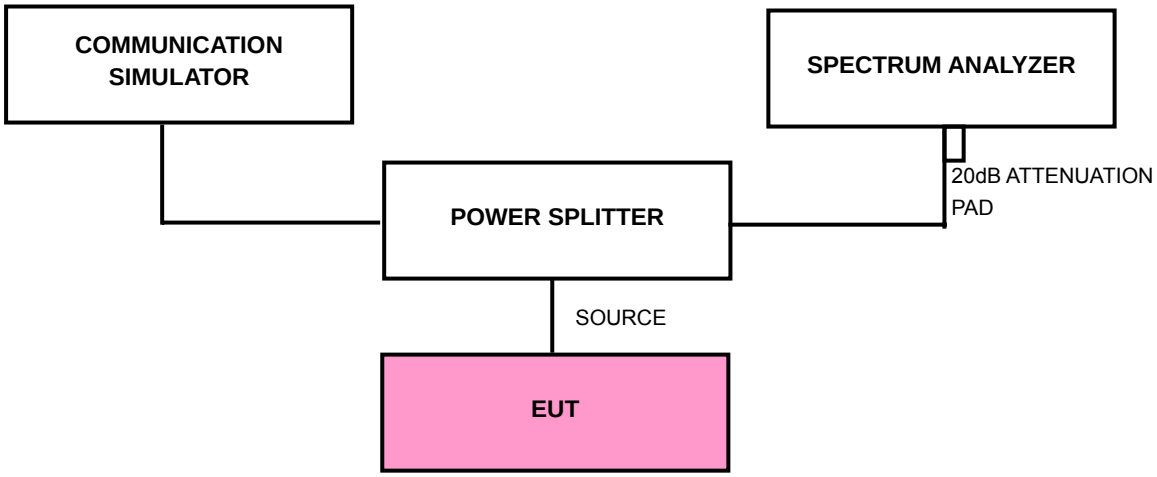

4.3.4 TEST PROCEDURES

a. The EUT makes a call to the communication simulator. The power was measured with R&S Spectrum Analyzer. All measurements were done at 3 channels 4132, 4182 and 4233 (low, middle and high operational frequency range.)

b. The conducted occupied bandwidth used the power splitter via EUT RF power connector between simulation base station and spectrum analyzer.

c. The communication simulator station system controlled a EUT to export maximum output power under transmission mode and specific channel frequency. Use OBW measurement function of Spectrum analyzer to measure 99 % occupied bandwidth.

4.3.5 EUT OPERATING CONDITION

a. The EUT makes a call to the communication simulator.

b. The communication simulator station system controlled a EUT to export maximum and minimum output power under transmission mode and specific channel frequency.

4.3.6 TEST RESULTS

FOR WCDMA:

FOR WCDMA-RMC:

CHANNEL	FREQUENCY (MHz)	99% OCCUPIED BANDWIDTH (MHz)
4132	826.4	4.18
4182	836.4	4.20
4233	846.6	4.16

CH 4182

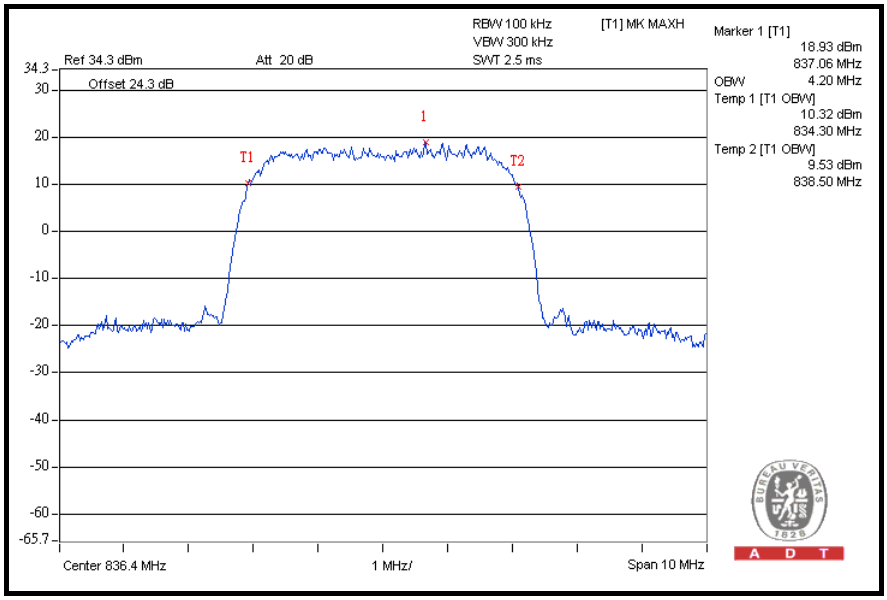

FOR HSDPA:

CHANNEL	FREQUENCY (MHz)	99% OCCUPIED BANDWIDTH (MHz)
4132	826.4	4.16
4182	836.4	4.16
4233	846.6	4.16

CH 4132

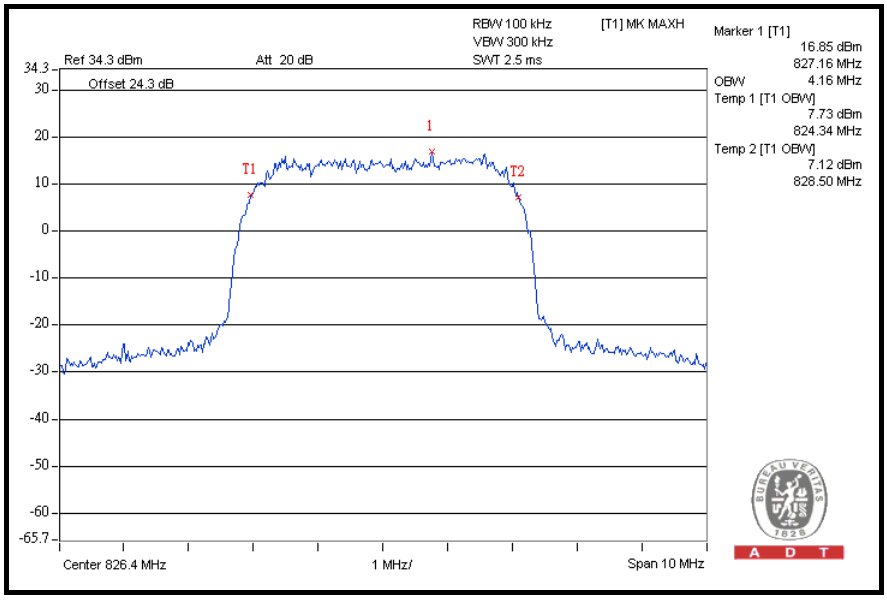

4.4 BAND EDGE MEASUREMENT

4.4.1 LIMITS OF BAND EDGE MEASUREMENT

According to FCC 22.917 specified that power of any emission outside of the authorized operating frequency ranges must be attenuated below the transmitting power (P) by a factor of at least 43 + 10 log(P) dB. In the 1 MHz bands immediately outside and adjacent to the frequency block a resolution bandwidth of at least one percent of the emission bandwidth of the fundamental emission of the transmitter may be employed.

4.4.2 TEST INSTRUMENTS

DESCRIPTION & MANUFACTURER	MODEL NO.	SERIAL NO.	DATE OF CALIBRATION	DUE DATE OF CALIBRATION
SPECTRUM ANALYZER R&S	FSP40	100039	Jan. 11, 2011	Jan. 10, 2012
Mini-Circuits Power Splitter	ZN2PD-9G	NA	May 25, 2011	May 24, 2012
RF cable	SUCOFLEX 104	274403/4	Aug. 20, 2010	Aug. 19, 2011
RF cable	SUCOFLEX 104	250729/4	Aug. 19, 2010	Aug. 18, 2011
RF cable	SUCOFLEX 104	214377/4	Aug. 19, 2010	Aug. 18, 2011
JFW 20dB attenuation	50HF-020-SMA	NA	NA	NA

NOTE: The calibration interval of the above test instruments is 12 months. And the calibrations are traceable to NML/ROC and NIST/USA.

4.4.3 TEST SETUP

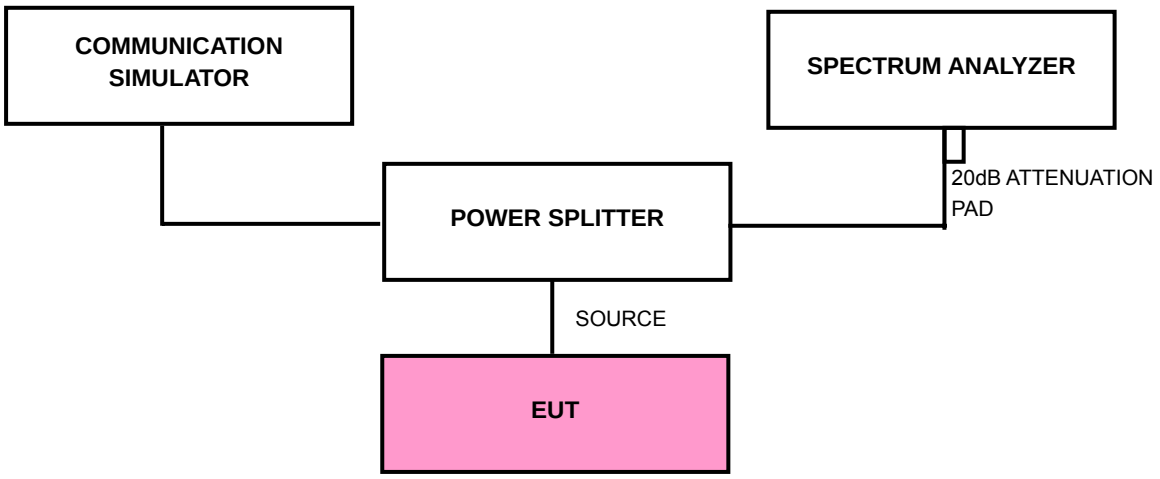

4.4.4 TEST PROCEDURES

a. The EUT makes a call to the communication simulator. The power was measured with R&S Spectrum Analyzer. All measurements were done at 2 channels 4132 and 4233 (low and high operational frequency range.)

b. The band edge measurement used the power splitter via EUT RF power connector between simulation base station and spectrum analyzer.

c. The center frequency of spectrum is the band edge frequency and span is 10MHz. RBW of the spectrum is 100kHz and VBW of the spectrum is 300kHz.

d. Record the max trace plot into the test report.

4.4.5 EUT OPERATING CONDITION

a. The EUT makes a call to the communication simulator.

b. The communication simulator station system controlled a EUT to export maximum output power under transmission mode and specific channel frequency.

4.4.6 TEST RESULTS

FOR WCDMA:

WCDMA-RMC MODE

LOWER BAND EDGE

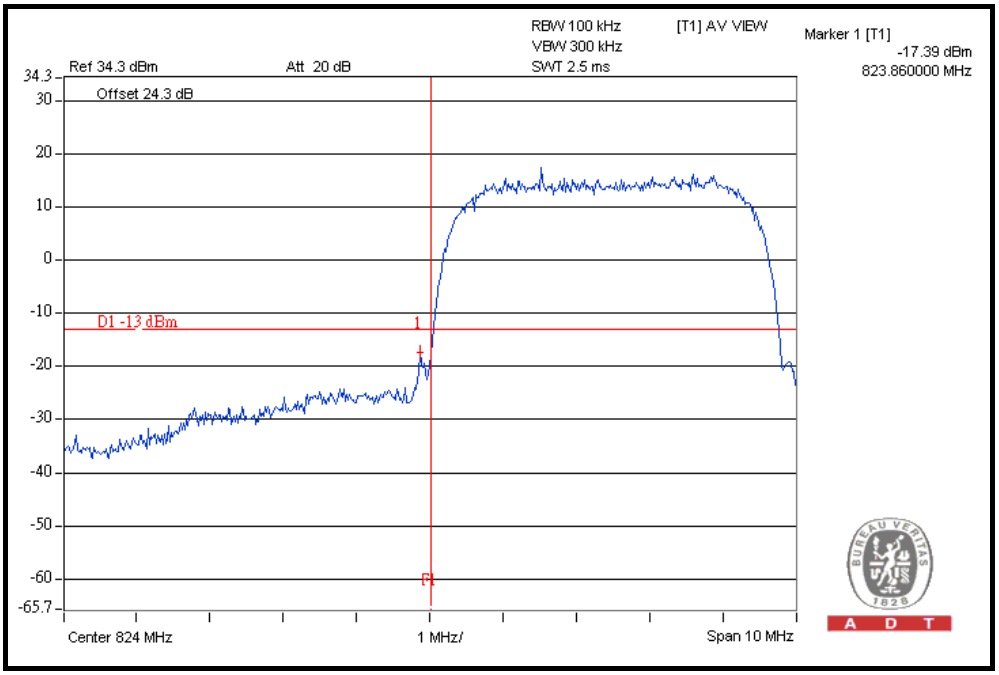

HIGHER BAND EDGE

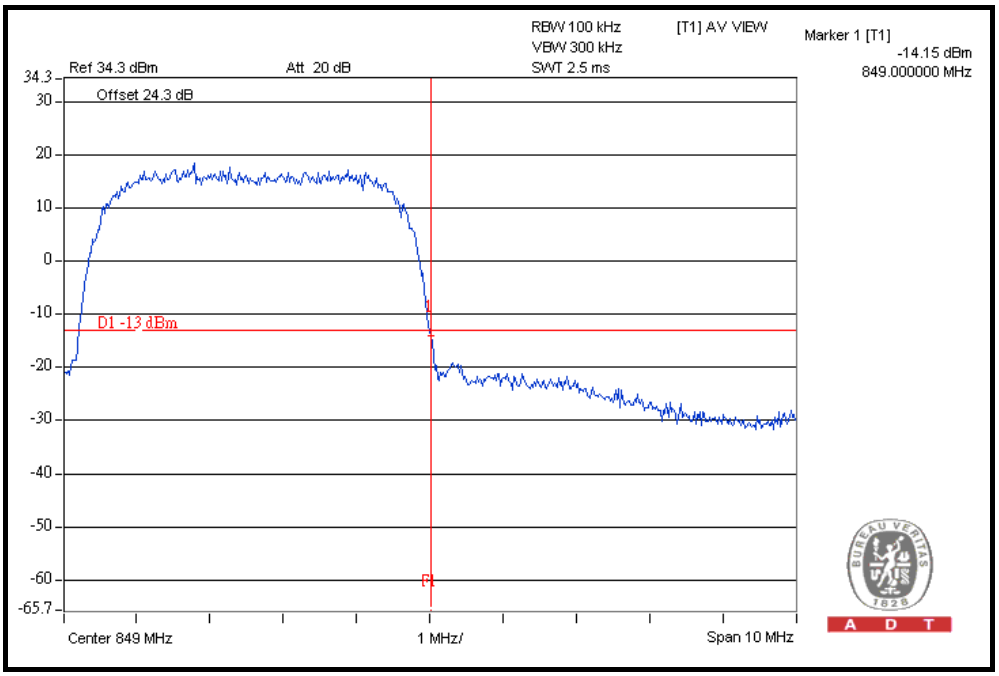

HSDPA MODE

LOWER BAND EDGE

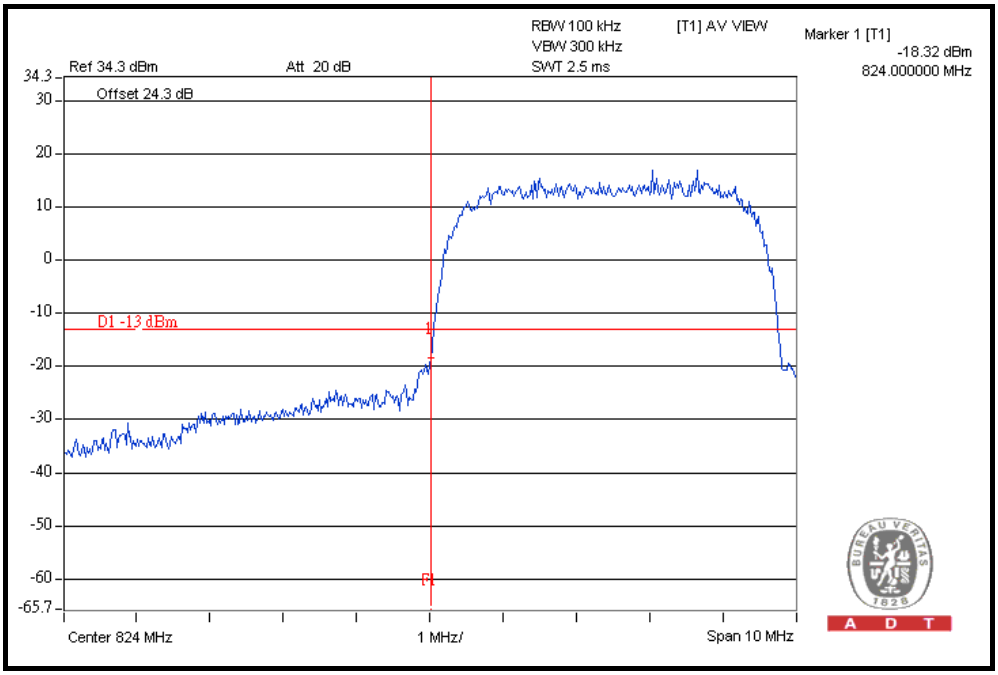

HIGHER BAND EDGE

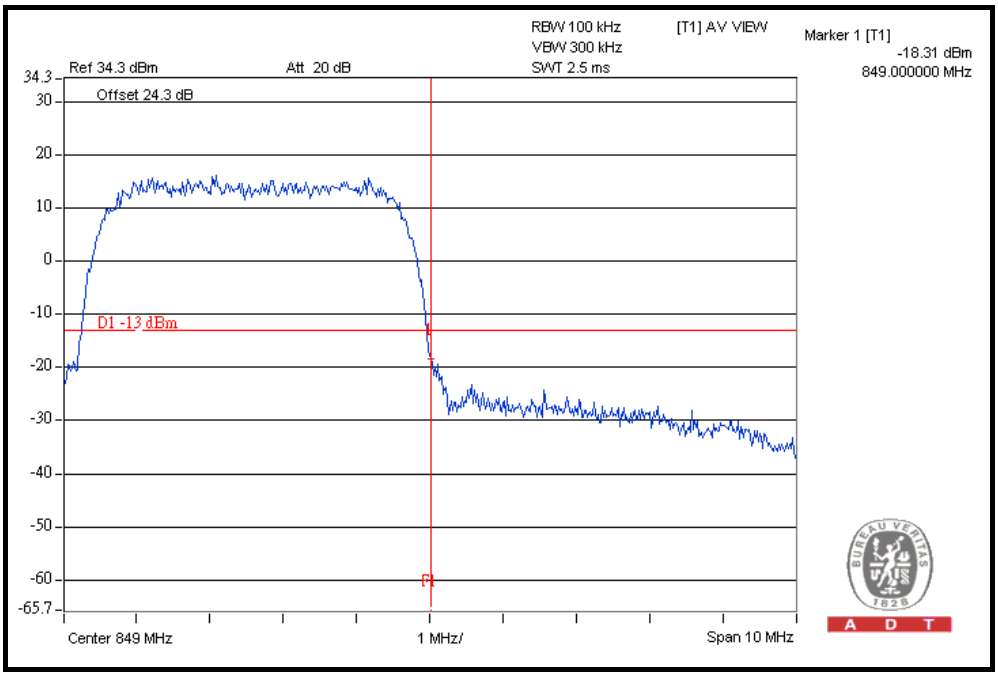

4.5 CONDUCTED SPURIOUS EMISSIONS

4.5.1 LIMITS OF CONDUCTED SPURIOUS EMISSIONS MEASUREMENT

In the FCC 22.917, On any frequency outside a licensee's frequency block within GPRS spectrum, the power of any emission shall be attenuated below the transmitter power (P) by at least 43 +10 log (P) dB. The emission limit equal to –13dBm.

4.5.2 TEST INSTRUMENTS

DESCRIPTION & MANUFACTURER	MODEL NO.	SERIAL NO.	DATE OF CALIBRATION	DUE DATE OF CALIBRATION
SPECTRUM ANALYZER R&S	FSP40	100039	Jan. 11, 2011	Jan. 10, 2012
Wainwright Instruments Band Reject Filter	WRCG 824/849-810/ 863-60/9SS	SN1	Mar. 23, 2011	Mar. 22, 2012
WI Highpass filter	WHK1.5/15G-10ST	SN1	Mar. 23, 2011	Mar. 22, 2012
Mini-Circuits Power Splitter	ZN2PD-9G	NA	May 25, 2011	May 24, 2012
RF cable	SUCOFLEX 104	274403/4	Aug. 20, 2010	Aug. 19, 2011
RF cable	SUCOFLEX 104	250729/4	Aug. 19, 2010	Aug. 18, 2011
RF cable	SUCOFLEX 104	214377/4	Aug. 19, 2010	Aug. 18, 2011
JFW 20dB attenuation	50HF-020-SMA	NA	NA	NA

NOTE: The calibration interval of the above test instruments is 12 months. And the calibrations are traceable to NML/ROC and NIST/USA.

4.5.3 TEST PROCEDURE

a. The EUT makes a phone call to the communication simulator. The power was measured with R&S Spectrum Analyzer. All measurements were done at 3 channels 4132, 4182 and 4233 (low, middle and high operational frequency range.)

b. The conducted spurious emission used the power splitter via EUT RF power connector between simulation base station and spectrum analyzer.

c. Measuring frequency range is from 9 kHz to 9GHz. 20dB attenuation pad is connected with spectrum. RBW=1MHz and VBW=3MHz is used for conducted emission measurement.

4.5.4 TEST SETUP

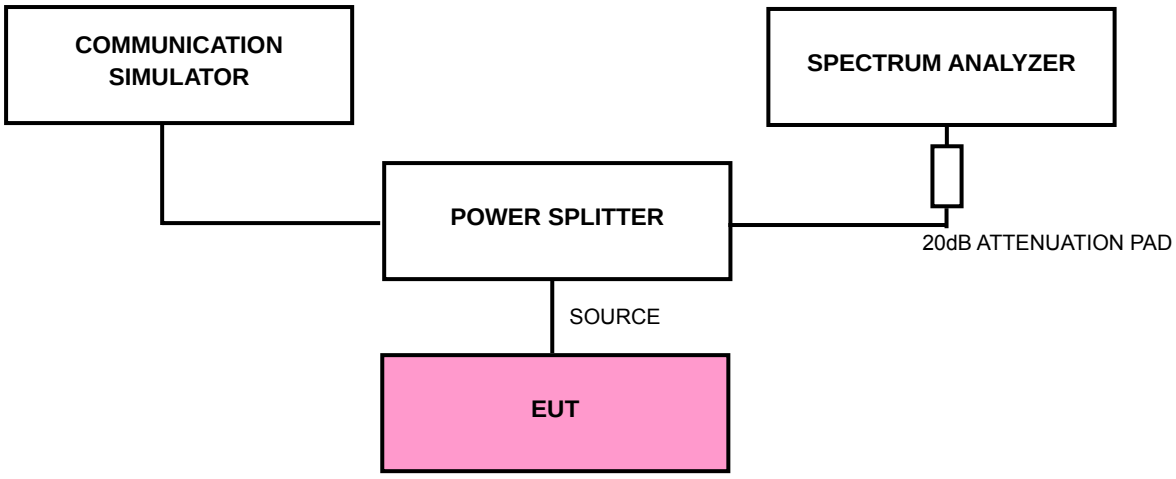

4.5.5 EUT OPERATING CONDITIONS

a. The EUT makes a call to the communication simulator.

b. The communication simulator station system controlled a EUT to export maximum output power under transmission mode and specific channel frequency.

4.5.6 TEST RESULTS

FOR WCDMA-RMC:

CH 4132: 9kHz ~ 1GHz

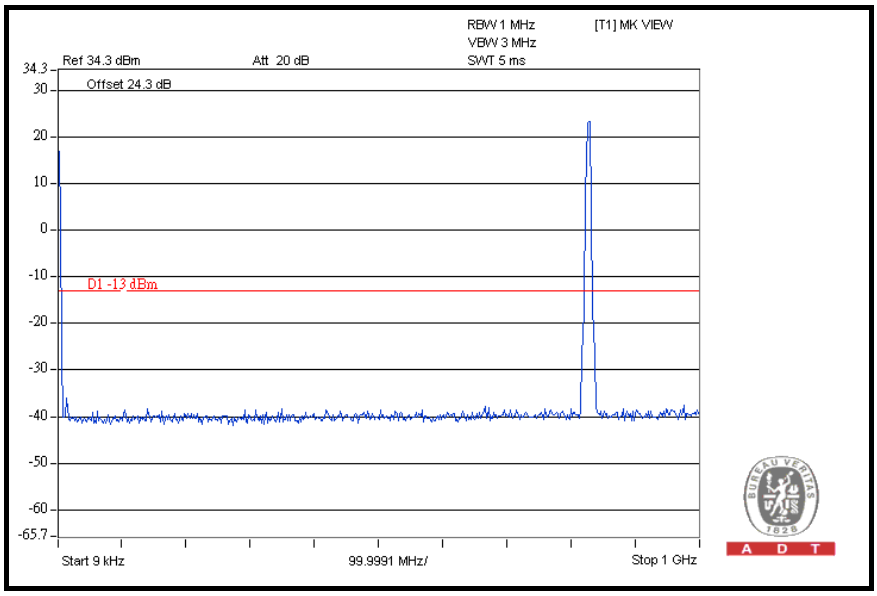

1GHz ~ 4GHz

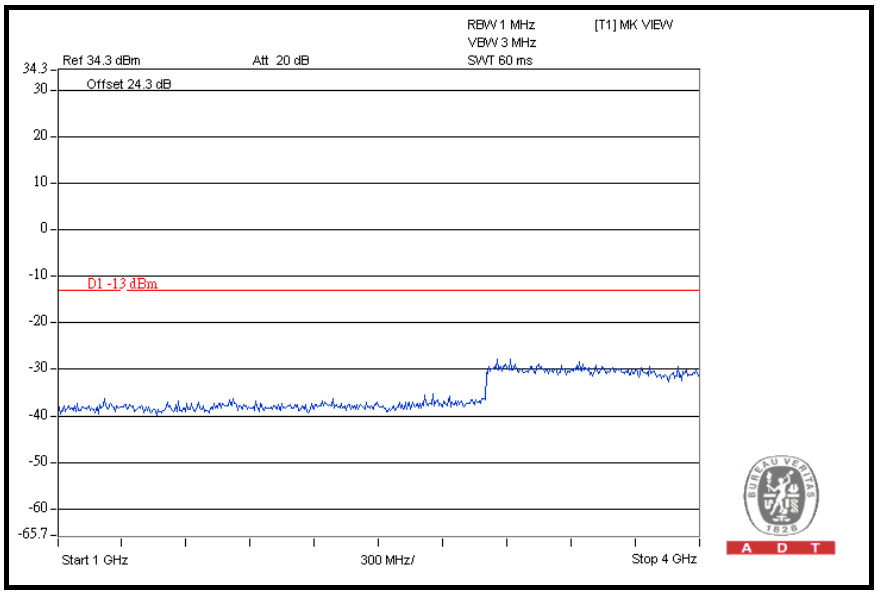

4GHz ~ 7GHz

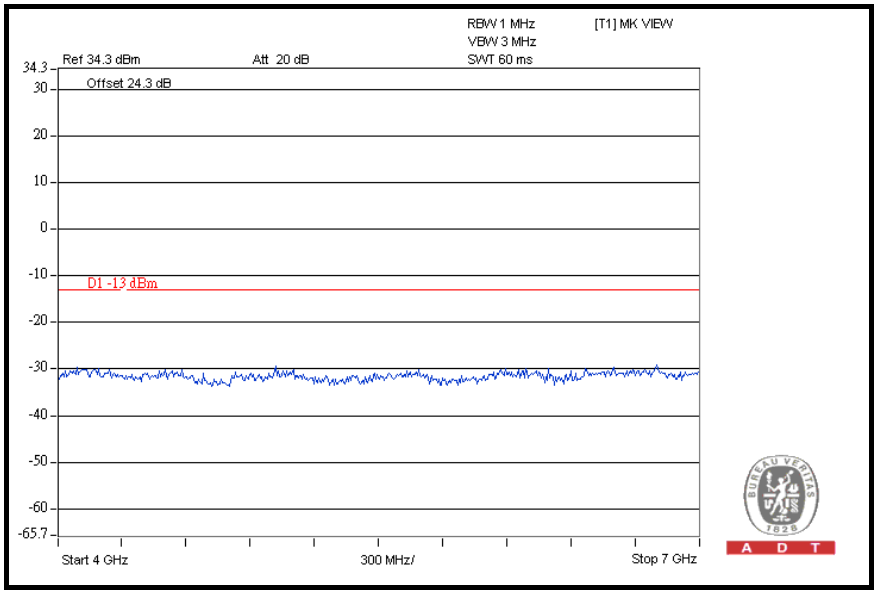

7GHz ~ 9GHz

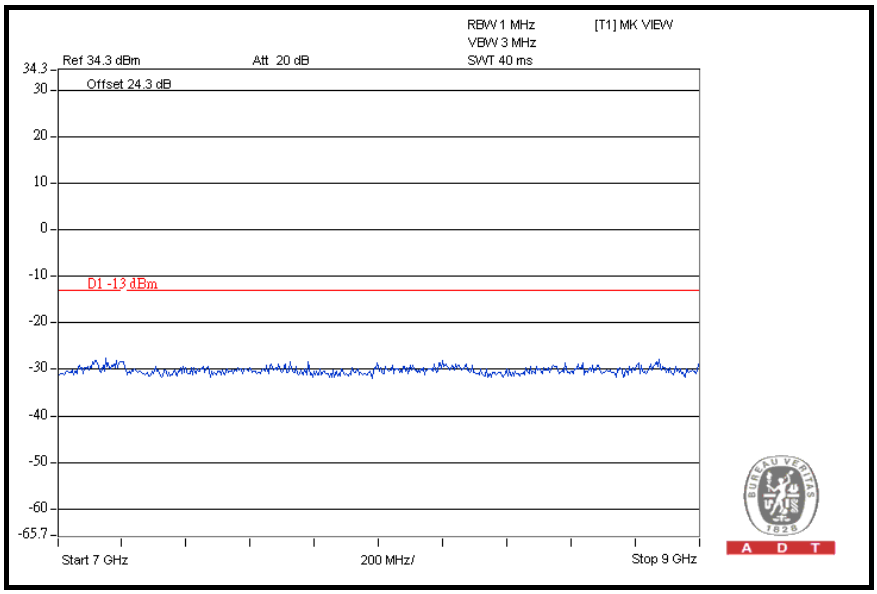

CH 4182: 9kHz ~ 1GHz

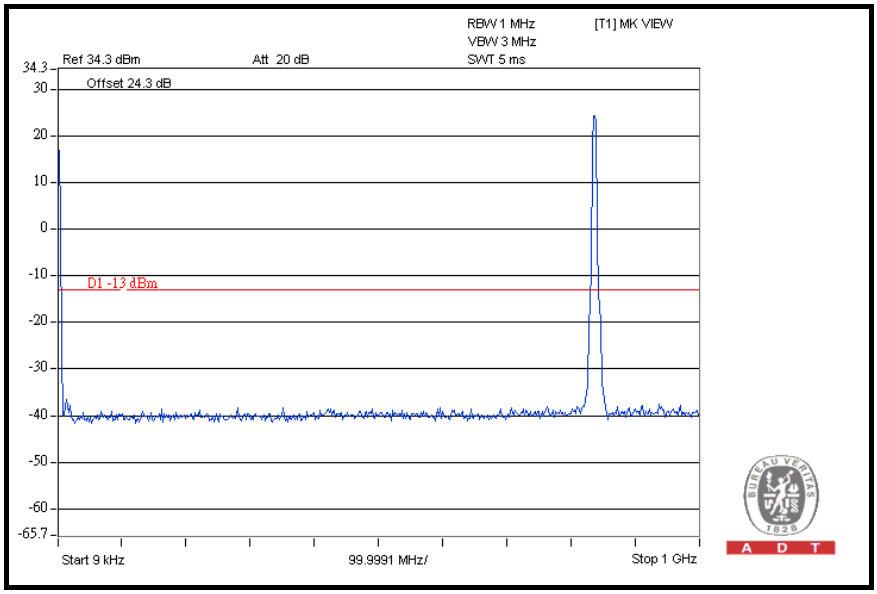

1GHz ~ 4GHz

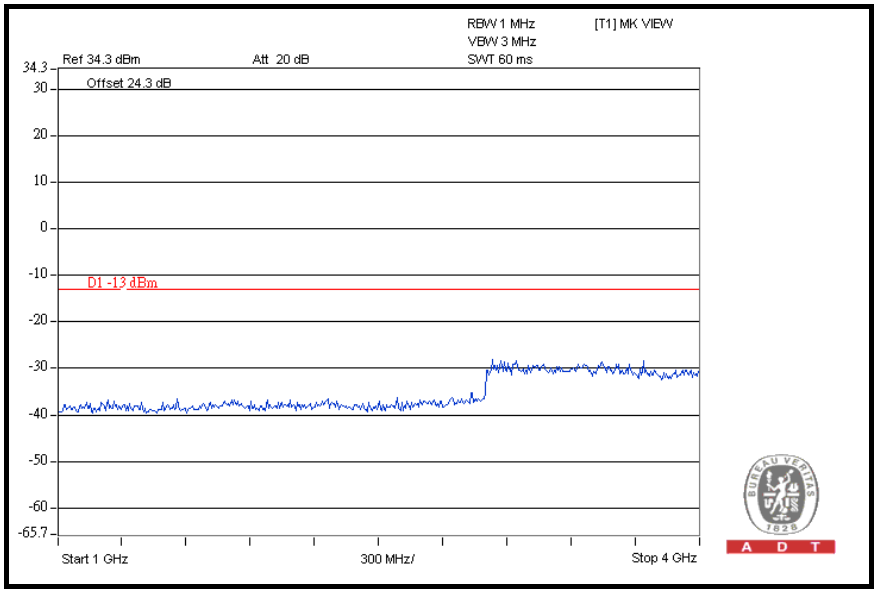

4GHz ~ 7GHz

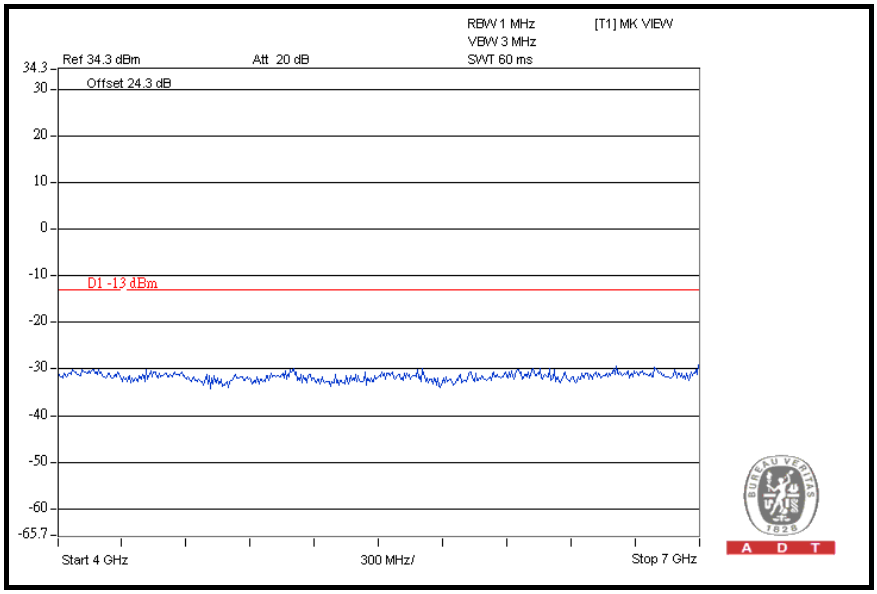

7GHz ~ 9GHz

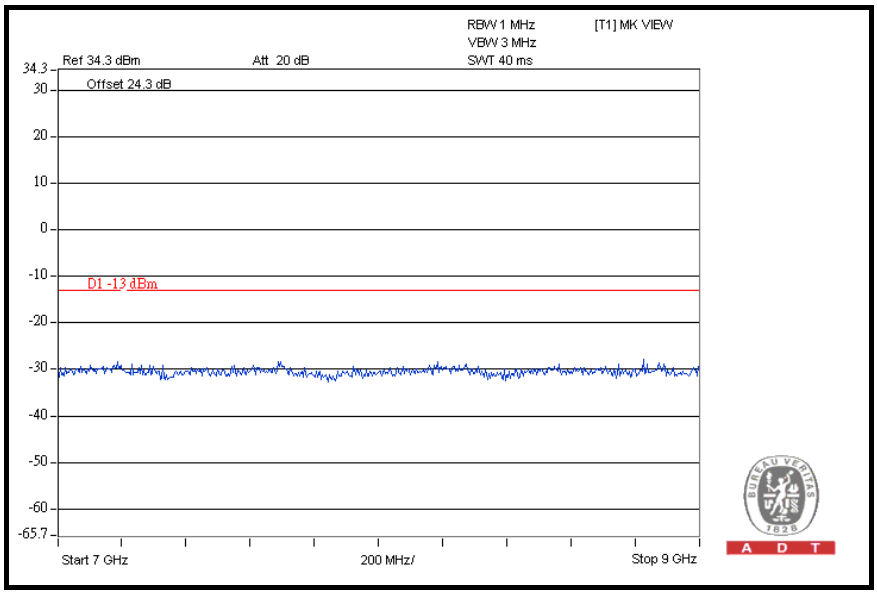

CH 4233: 9kHz ~ 1GHz

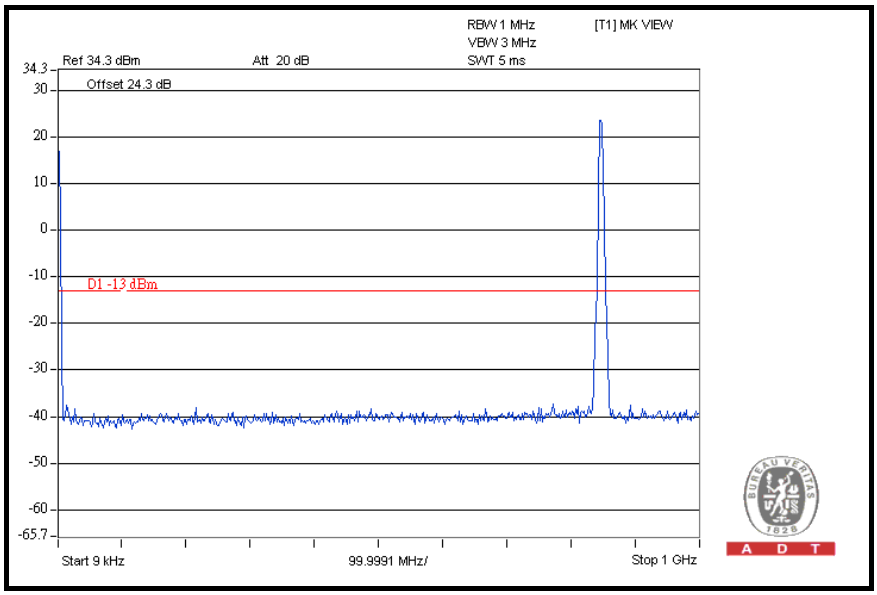

1GHz ~ 4GHz

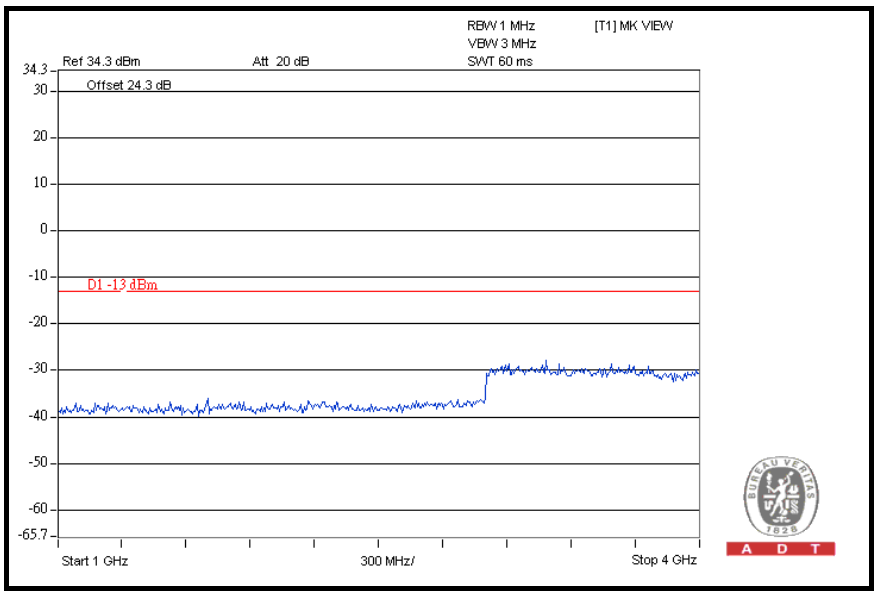

4GHz ~ 7GHz

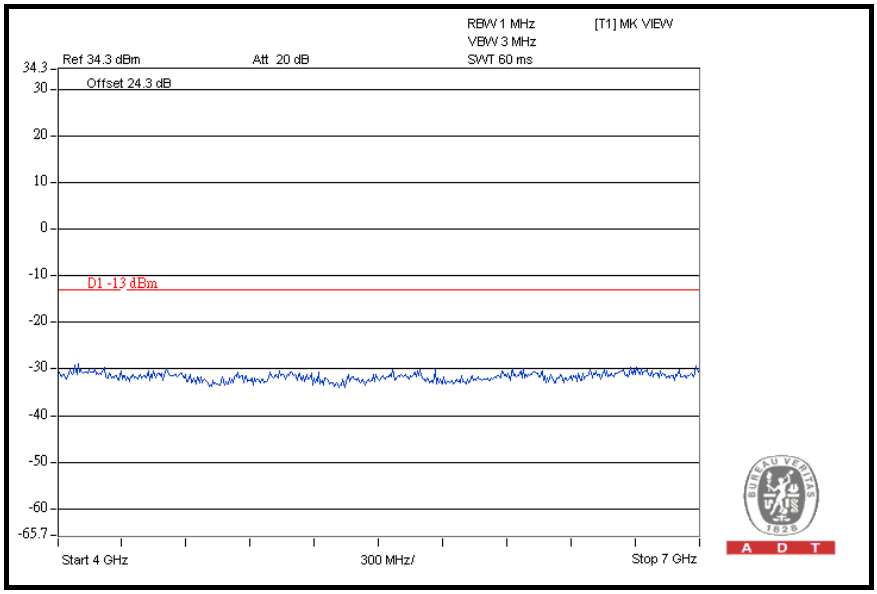

7GHz ~ 9GHz

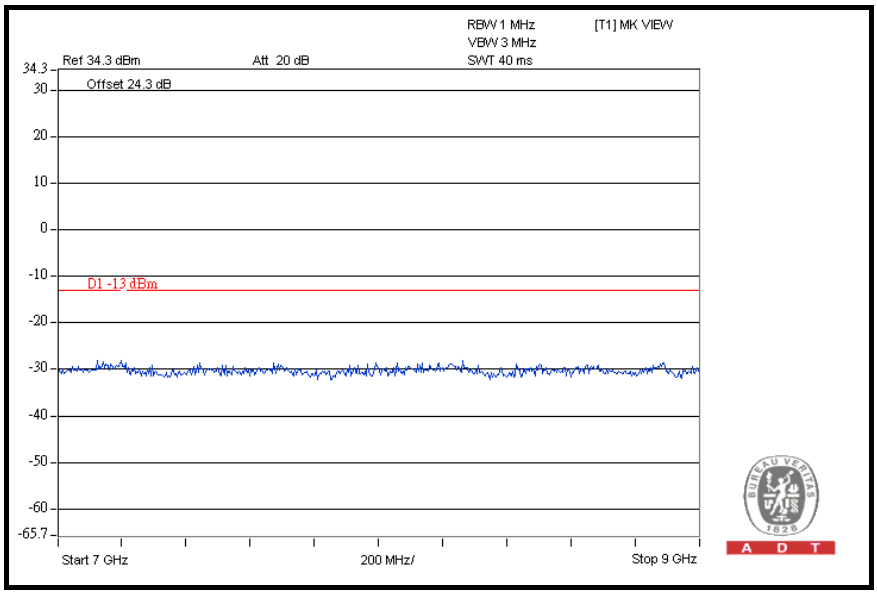

4.6 RADIATED EMISSION MEASUREMENT

4.6.1 LIMITS OF RADIATED EMISSION MEASUREMENT

In the FCC 22.917 (a), On any frequency outside a licensee's frequency block within USPCS spectrum, the power of any emission shall be attenuated below the transmitter power (P) by at least 43 + 10 log (P) dB. The emission limit equal to –13dBm.

4.6.2 TEST INSTRUMENTS

Same as 4.1.2.

4.6.3 TEST PROCEDURES

a. Substitution method is used for E.I.R.P measurement. In the semi-anechoic chamber, EUT placed on the 0.8m height of Turn Table, rotated the table around 360 degrees to search the maximum radiation power and receiver antenna shall be rotated vertical and horizontal polarization and moved height from 1m to 4m to find the maximum polar radiated power. The " Read Value " is the spectrum reading the maximum power value.

b. The substitution horn antenna is substituted for EUT at the same position and signals generator export the CW signal to the substitution antenna via a TX cable. Rotated the Turn Table and moved receiving antenna to find the maximum radiation power. Adjust output power level of S.G to get a Value of spectrum reading equal to " Read Value " of step a. Record the power level of S.G

c. EIRP = Output power level of S.G – TX cable loss + Antenna gain of substitution horn.

d. E.R.P power can be calculated form E.I.R.P power by subtracting the gain of dipole, E.R.P power = E.I.P.R power - 2.15dBi.

NOTE: The resolution bandwidth and video bandwidth of test receiver/spectrum analyzer is 1MHz/3MHz.

4.6.4 DEVIATION FROM TEST STANDARD

No deviation

4.6.5 TEST SETUP

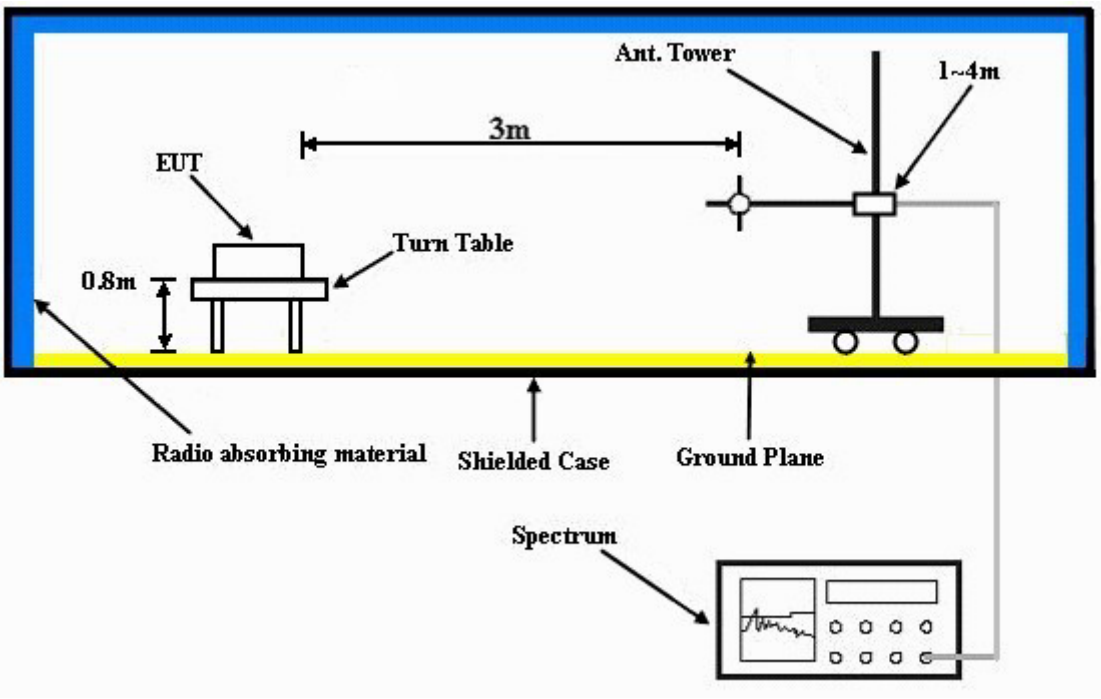

For the actual test configuration, please refer to the attached file (Test Setup Photo).

4.6.6 EUT OPERATING CONDITIONS

a. The EUT makes a call to the communication simulator.

b. The communication simulator station system controlled a EUT to export maximum output power under transmission mode and specific channel frequency.

4.6.7 TEST RESULTS

Below 1GHz

FOR WCDMA-RMC:

X-AXIS

MODE	TX channel 4233					
ANTENNA POLARITY & TEST DISTANCE: HORIZONTAL AT 3 M						
No.	**Freq. (MHz)**	**Emission Level (dBuV)**	**Limit (dBm)**	**S.G Power Value (dBm)**	**Correction Factor (dB)**	**Power Value (dBm)**
1	80.54	40.2	-13.0	-46.4	-7.7	-54.1
2	154.41	45.8	-13.0	-40.8	-7.7	-48.5
3	245.77	39.4	-13.0	-47.0	-7.7	-54.7
4	401.28	40.9	-13.0	-45.8	-7.8	-53.6
5	702.59	38.1	-13.0	-48.7	-7.9	-56.6
6	782.28	37.0	-13.0	-49.4	-7.9	-57.3
ANTENNA POLARITY & TEST DISTANCE: VERTICAL AT 3 M						
No.	**Freq. (MHz)**	**Emission Level (dBuV)**	**Limit (dBm)**	**S.G Power Value (dBm)**	**Correction Factor (dB)**	**Power Value (dBm)**
1	39.72	48.1	-13.0	-38.8	-7.7	-46.5
2	148.58	51.4	-13.0	-35.3	-7.7	-43.0
3	269.10	45.4	-13.0	-41.7	-7.7	-49.4
4	601.50	38.3	-13.0	-48.2	-7.8	-56.0
5	702.59	40.7	-13.0	-45.8	-7.9	-53.7
6	757.01	39.0	-13.0	-48.0	-7.9	-55.9

REMARKS: 1. Output Power (dBm) = S.G Value (dBm) + Correction Factor (dB).
2. Correction Factor (dB) = Substitution Antenna Gain (dB) + Cable Loss (dB).

Y-AXIS

MODE	TX channel 4233					
ANTENNA POLARITY & TEST DISTANCE: HORIZONTAL AT 3 M						
No.	**Freq. (MHz)**	**Emission Level (dBuV)**	**Limit (dBm)**	**S.G Power Value (dBm)**	**Correction Factor (dB)**	**Power Value (dBm)**
1	84.65	44.5	-13.0	-42.0	-7.7	-49.7
2	160.65	45.8	-13.0	-40.7	-7.7	-48.4
3	274.68	41.3	-13.0	-45.4	-7.7	-53.1
4	403.58	37.8	-13.0	-48.9	-7.8	-56.7
5	702.68	39.5	-13.0	-46.8	-7.9	-54.7
6	758.65	37.9	-13.0	-48.7	-7.9	-56.6
ANTENNA POLARITY & TEST DISTANCE: VERTICAL AT 3 M						
No.	**Freq. (MHz)**	**Emission Level (dBuV)**	**Limit (dBm)**	**S.G Power Value (dBm)**	**Correction Factor (dB)**	**Power Value (dBm)**
1	41.26	46.8	-13.0	-40.1	-7.7	-47.8
2	**160.56**	**52.4**	**-13.0**	**-34.2**	**-7.7**	**-41.9**
3	271.66	45.2	-13.0	-41.9	-7.7	-49.6
4	401.65	37.8	-13.0	-48.3	-7.8	-56.1
5	504.21	37.8	-13.0	-48.6	-7.8	-56.4
6	702.82	40.9	-13.0	-45.9	-7.9	-53.8

REMARKS: 1. Output Power (dBm) = S.G Value (dBm) + Correction Factor (dB).
2. Correction Factor (dB) = Substitution Antenna Gain (dB) + Cable Loss (dB).

Z-AXIS

MODE	TX channel 4233					
ANTENNA POLARITY & TEST DISTANCE: HORIZONTAL AT 3 M						
No.	**Freq. (MHz)**	**Emission Level (dBuV)**	**Limit (dBm)**	**S.G Power Value (dBm)**	**Correction Factor (dB)**	**Power Value (dBm)**
1	78.60	43.2	-13.0	-43.4	-7.7	-51.1
2	160.24	45.7	-13.0	-40.7	-7.7	-48.4
3	251.60	38.1	-13.0	-48.6	-7.7	-56.3
4	401.28	32.5	-13.0	-54.5	-7.8	-62.3
5	702.59	38.1	-13.0	-48.9	-7.9	-56.8
6	854.21	35.8	-13.0	-51.1	-7.9	-59.0
ANTENNA POLARITY & TEST DISTANCE: VERTICAL AT 3 M						
No.	**Freq. (MHz)**	**Emission Level (dBuV)**	**Limit (dBm)**	**S.G Power Value (dBm)**	**Correction Factor (dB)**	**Power Value (dBm)**
1	37.78	47.3	-13.0	-39.8	-7.7	-47.5
2	80.54	45.4	-13.0	-41.0	-7.7	-48.7
3	150.52	52.0	-13.0	-35.2	-7.7	-42.9
4	269.10	43.1	-13.0	-43.3	-7.7	-51.0
5	650.10	39.5	-13.0	-47.3	-7.8	-55.1
6	758.96	39.9	-13.0	-46.4	-7.9	-54.3

REMARKS: 1. Output Power (dBm) = S.G Value (dBm) + Correction Factor (dB).
2. Correction Factor (dB) = Substitution Antenna Gain (dB) + Cable Loss (dB).

FOR HSDPA:

X-AXIS

MODE	TX channel 4233					
ANTENNA POLARITY & TEST DISTANCE: HORIZONTAL AT 3 M						
No.	**Freq. (MHz)**	**Emission Level (dBuV)**	**Limit (dBm)**	**S.G Power Value (dBm)**	**Correction Factor (dB)**	**Power Value (dBm)**
1	82.48	41.6	-13.0	-44.9	-7.7	-52.6
2	158.30	45.9	-13.0	-40.8	-7.7	-48.5
3	245.77	39.9	-13.0	-46.8	-7.7	-54.5
4	379.90	34.2	-13.0	-52.8	-7.8	-60.6
5	700.64	39.1	-13.0	-47.3	-7.9	-55.2
6	801.72	37.6	-13.0	-49.1	-7.9	-57.0
ANTENNA POLARITY & TEST DISTANCE: VERTICAL AT 3 M						
No.	**Freq. (MHz)**	**Emission Level (dBuV)**	**Limit (dBm)**	**S.G Power Value (dBm)**	**Correction Factor (dB)**	**Power Value (dBm)**
1	37.78	49.6	-13.0	-37.4	-7.7	-45.1
2	160.24	52.1	-13.0	-34.7	-7.7	-42.4
3	269.10	42.2	-13.0	-44.1	-7.7	-51.8
4	401.28	33.8	-13.0	-53.3	-7.8	-61.1
5	601.50	38.3	-13.0	-48.3	-7.8	-56.1
6	702.59	40.4	-13.0	-46.4	-7.9	-54.3

REMARKS: 1. Output Power (dBm) = S.G Value (dBm) + Correction Factor (dB).
2. Correction Factor (dB) = Substitution Antenna Gain (dB) + Cable Loss (dB).

Y-AXIS

MODE	TX channel 4233					
ANTENNA POLARITY & TEST DISTANCE: HORIZONTAL AT 3 M						
No.	**Freq. (MHz)**	**Emission Level (dBuV)**	**Limit (dBm)**	**S.G Power Value (dBm)**	**Correction Factor (dB)**	**Power Value (dBm)**
1	84.43	44.0	-13.0	-42.3	-7.7	-50.0
2	160.24	45.3	-13.0	-40.9	-7.7	-48.6
3	274.93	40.8	-13.0	-45.9	-7.7	-53.6
4	403.23	37.0	-13.0	-50.0	-7.8	-57.8
5	702.59	39.2	-13.0	-47.5	-7.9	-55.4
6	758.96	37.4	-13.0	-48.8	-7.9	-56.7
ANTENNA POLARITY & TEST DISTANCE: VERTICAL AT 3 M						
No.	**Freq. (MHz)**	**Emission Level (dBuV)**	**Limit (dBm)**	**S.G Power Value (dBm)**	**Correction Factor (dB)**	**Power Value (dBm)**
1	41.85	47.2	-13.0	-39.7	-7.7	-47.4
2	160.45	51.9	-13.0	-34.5	-7.7	-42.2
3	271.25	44.8	-13.0	-42.1	-7.7	-49.8
4	401.28	37.4	-13.0	-49.3	-7.8	-57.1
5	504.45	37.1	-13.0	-49.6	-7.8	-57.4
6	702.23	40.2	-13.0	-46.5	-7.9	-54.4

REMARKS: 1. Output Power (dBm) = S.G Value (dBm) + Correction Factor (dB).
2. Correction Factor (dB) = Substitution Antenna Gain (dB) + Cable Loss (dB).

Z-AXIS

MODE	TX channel 4132					
ANTENNA POLARITY & TEST DISTANCE: HORIZONTAL AT 3 M						
No.	**Freq. (MHz)**	**Emission Level (dBuV)**	**Limit (dBm)**	**S.G Power Value (dBm)**	**Correction Factor (dB)**	**Power Value (dBm)**
1	78.6	43.3	-13.0	-43.3	-7.7	-51.0
2	158.3	46.6	-13.0	-40.5	-7.7	-48.2
3	245.77	39.7	-13.0	-47.3	-7.7	-55.0
4	364.35	33.6	-13.0	-52.8	-7.8	-60.6
5	700.64	38.3	-13.0	-47.7	-7.9	-55.6
6	776.45	35.5	-13.0	-50.6	-7.9	-58.5
ANTENNA POLARITY & TEST DISTANCE: VERTICAL AT 3 M						
No.	**Freq. (MHz)**	**Emission Level (dBuV)**	**Limit (dBm)**	**S.G Power Value (dBm)**	**Correction Factor (dB)**	**Power Value (dBm)**
1	43.61	46.5	-13.0	-40.6	-7.7	-48.3
2	146.63	51.1	-13.0	-35.7	-7.7	-43.4
3	272.99	42.1	-13.0	-44.4	-7.7	-52.1
4	401.28	35.7	-13.0	-51.2	-7.8	-59.0
5	601.5	37.6	-13.0	-48.8	-7.8	-56.6
6	702.59	39.6	-13.0	-47.3	-7.9	-55.2

REMARKS: 1. Output Power (dBm) = S.G Value (dBm) + Correction Factor (dB).
2. Correction Factor (dB) = Substitution Antenna Gain (dB) + Cable Loss (dB).

Above 1GHz

X-AXIS

MODE	TX channel 4132					
ANTENNA POLARITY & TEST DISTANCE: HORIZONTAL AT 3 M						
No.	Freq. (MHz)	Emission Level (dBuV)	Limit (dBm)	S.G Power Value (dBm)	Correction Factor (dB)	Power Value (dBm)
1	1652.8	44.6	-13.0	-58.8	7.6	-51.2
2	2479.2	46.3	-13.0	-58.0	8.4	-49.6
3	3305.6	46.7	-13.0	-59.0	9.9	-49.1
ANTENNA POLARITY & TEST DISTANCE: VERTICAL AT 3 M						
No.	Freq. (MHz)	Emission Level (dBuV)	Limit (dBm)	S.G Power Value (dBm)	Correction Factor (dB)	Power Value (dBm)
1	1652.8	45.7	-13.0	-57.7	7.6	-50.1
2	2479.2	45.1	-13.0	-59.2	8.4	-50.8
3	3305.6	43.4	-13.0	-62.3	9.9	-52.4
MODE	TX channel 4182					
ANTENNA POLARITY & TEST DISTANCE: HORIZONTAL AT 3 M						
No.	Freq. (MHz)	Emission Level (dBuV)	Limit (dBm)	S.G Power Value (dBm)	Correction Factor (dB)	Power Value (dBm)
1	1672.8	43.2	-13.0	-60.2	7.7	-52.5
2	2509.2	45.9	-13.0	-58.3	8.4	-49.9
3	3345.6	46.2	-13.0	-59.7	9.9	-49.8
ANTENNA POLARITY & TEST DISTANCE: VERTICAL AT 3 M						
No.	Freq. (MHz)	Emission Level (dBuV)	Limit (dBm)	S.G Power Value (dBm)	Correction Factor (dB)	Power Value (dBm)
1	1672.8	46.0	-13.0	-57.4	7.7	-49.7
2	2509.2	45.9	-13.0	-58.3	8.4	-49.9
3	3345.6	43.0	-13.0	-62.9	9.9	-53.0
MODE	TX channel 4233					
ANTENNA POLARITY & TEST DISTANCE: HORIZONTAL AT 3 M						
No.	Freq. (MHz)	Emission Level (dBuV)	Limit (dBm)	S.G Power Value (dBm)	Correction Factor (dB)	Power Value (dBm)
1	1693.2	45.1	-13.0	-58.7	7.9	-50.8
2	2539.8	45.3	-13.0	-59.2	8.5	-50.7
3	3386.4	44.2	-13.0	-61.5	9.9	-51.6
ANTENNA POLARITY & TEST DISTANCE: VERTICAL AT 3 M						
No.	Freq. (MHz)	Emission Level (dBuV)	Limit (dBm)	S.G Power Value (dBm)	Correction Factor (dB)	Power Value (dBm)
1	1693.2	44.9	-13.0	-58.9	7.9	-51.0
2	2539.8	46.6	-13.0	-57.9	8.5	-49.4
3	3386.4	46.2	-13.0	-59.5	9.9	-49.6

REMARKS: 1. Output Power (dBm) = S.G Value (dBm) + Correction Factor (dB).
2. Correction Factor (dB) = Substitution Antenna Gain (dB) + Cable Loss (dB).

Y-AXIS

MODE		TX channel 4132				
ANTENNA POLARITY & TEST DISTANCE: HORIZONTAL AT 3 M						
No.	**Freq. (MHz)**	**Emission Level (dBuV)**	**Limit (dBm)**	**S.G Power Value (dBm)**	**Correction Factor (dB)**	**Power Value (dBm)**
1	1652.8	44.7	-13.0	-58.7	7.6	-51.1
2	2479.2	48.1	-13.0	-56.2	8.4	-47.8
3	3305.6	46.2	-13.0	-59.5	9.9	-49.6
ANTENNA POLARITY & TEST DISTANCE: VERTICAL AT 3 M						
No.	**Freq. (MHz)**	**Emission Level (dBuV)**	**Limit (dBm)**	**S.G Power Value (dBm)**	**Correction Factor (dB)**	**Power Value (dBm)**
1	1652.8	47.7	-13.0	-55.7	7.6	-48.1
2	2479.2	46.9	-13.0	-57.4	8.4	-49.0
3	3305.6	46.3	-13.0	-59.4	9.9	-49.5
MODE		TX channel 4182				
ANTENNA POLARITY & TEST DISTANCE: HORIZONTAL AT 3 M						
No.	**Freq. (MHz)**	**Emission Level (dBuV)**	**Limit (dBm)**	**S.G Power Value (dBm)**	**Correction Factor (dB)**	**Power Value (dBm)**
1	1672.8	44.3	-13.0	-59.1	7.7	-51.4
2	2509.2	48.5	-13.0	-55.7	8.4	-47.3
3	3345.6	45.8	-13.0	-60.1	9.9	-50.2
ANTENNA POLARITY & TEST DISTANCE: VERTICAL AT 3 M						
No.	**Freq. (MHz)**	**Emission Level (dBuV)**	**Limit (dBm)**	**S.G Power Value (dBm)**	**Correction Factor (dB)**	**Power Value (dBm)**
1	1672.8	47.3	-13.0	-56.1	7.7	-48.4
2	2509.2	46.6	-13.0	-57.6	8.4	-49.2
3	3345.6	46.6	-13.0	-59.3	9.9	-49.4
MODE		TX channel 4233				
ANTENNA POLARITY & TEST DISTANCE: HORIZONTAL AT 3 M						
No.	**Freq. (MHz)**	**Emission Level (dBuV)**	**Limit (dBm)**	**S.G Power Value (dBm)**	**Correction Factor (dB)**	**Power Value (dBm)**
1	1693.2	44.1	-13.0	-59.7	7.9	-51.8
2	2539.8	48.7	-13.0	-55.8	8.5	-47.3
3	3386.4	46.3	-13.0	-59.4	9.9	-49.5
ANTENNA POLARITY & TEST DISTANCE: VERTICAL AT 3 M						
No.	**Freq. (MHz)**	**Emission Level (dBuV)**	**Limit (dBm)**	**S.G Power Value (dBm)**	**Correction Factor (dB)**	**Power Value (dBm)**
1	1693.2	48.6	-13.0	-55.2	7.9	-47.3
2	2539.8	47.3	-13.0	-57.2	8.5	-48.7
3	3386.4	47.2	-13.0	-58.5	9.9	-48.6

REMARKS: 1. Output Power (dBm) = S.G Value (dBm) + Correction Factor (dB).
2. Correction Factor (dB) = Substitution Antenna Gain (dB) + Cable Loss (dB).

Z-AXIS

MODE	TX channel 4132					
ANTENNA POLARITY & TEST DISTANCE: HORIZONTAL AT 3 M						
No.	**Freq. (MHz)**	**Emission Level (dBuV)**	**Limit (dBm)**	**S.G Power Value (dBm)**	**Correction Factor (dB)**	**Power Value (dBm)**
1	1652.8	46.3	-13.0	-57.1	7.6	-49.5
2	2479.2	48.7	-13.0	-55.6	8.4	-47.2
3	3305.6	43.1	-13.0	-62.6	9.9	-52.7
ANTENNA POLARITY & TEST DISTANCE: VERTICAL AT 3 M						
No.	**Freq. (MHz)**	**Emission Level (dBuV)**	**Limit (dBm)**	**S.G Power Value (dBm)**	**Correction Factor (dB)**	**Power Value (dBm)**
1	1652.8	44.7	-13.0	-58.7	7.6	-51.1
2	2479.2	46.0	-13.0	-58.3	8.4	-49.9
3	3305.6	45.9	-13.0	-59.8	9.9	-49.9
MODE	TX channel 4182					
ANTENNA POLARITY & TEST DISTANCE: HORIZONTAL AT 3 M						
No.	**Freq. (MHz)**	**Emission Level (dBuV)**	**Limit (dBm)**	**S.G Power Value (dBm)**	**Correction Factor (dB)**	**Power Value (dBm)**
1	1672.8	45.6	-13.0	-57.8	7.7	-50.1
2	2509.2	48.3	-13.0	-55.9	8.4	-47.5
3	3345.6	42.7	-13.0	-63.2	9.9	-53.3
ANTENNA POLARITY & TEST DISTANCE: VERTICAL AT 3 M						
No.	**Freq. (MHz)**	**Emission Level (dBuV)**	**Limit (dBm)**	**S.G Power Value (dBm)**	**Correction Factor (dB)**	**Power Value (dBm)**
1	1672.8	44.2	-13.0	-59.2	7.7	-51.5
2	2509.2	46.0	-13.0	-58.2	8.4	-49.8
3	3345.6	46.5	-13.0	-59.4	9.9	-49.5
MODE	TX channel 4233					
ANTENNA POLARITY & TEST DISTANCE: HORIZONTAL AT 3 M						
No.	**Freq. (MHz)**	**Emission Level (dBuV)**	**Limit (dBm)**	**S.G Power Value (dBm)**	**Correction Factor (dB)**	**Power Value (dBm)**
1	1693.2	45.9	-13.0	-57.9	7.9	-50.0
2	2539.8	48.7	-13.0	-55.8	8.5	-47.3
3	3386.4	43.2	-13.0	-62.5	9.9	-52.6
ANTENNA POLARITY & TEST DISTANCE: VERTICAL AT 3 M						
No.	**Freq. (MHz)**	**Emission Level (dBuV)**	**Limit (dBm)**	**S.G Power Value (dBm)**	**Correction Factor (dB)**	**Power Value (dBm)**
1	1693.2	44.4	-13.0	-59.4	7.9	-51.5
2	2539.8	46.3	-13.0	-58.2	8.5	-49.7
3	3386.4	46.9	-13.0	-58.8	9.9	-48.9

REMARKS: 1. Output Power (dBm) = S.G Value (dBm) + Correction Factor (dB).
2. Correction Factor (dB) = Substitution Antenna Gain (dB) + Cable Loss (dB).

FOR HSDPA BAND: X-AXIS

MODE	TX channel 4233					
ANTENNA POLARITY & TEST DISTANCE: HORIZONTAL AT 3 M						
No.	**Freq. (MHz)**	**Emission Level (dBuV)**	**Limit (dBm)**	**S.G Power Value (dBm)**	**Correction Factor (dB)**	**Power Value (dBm)**
1	1693.2	43.8	-13.0	-59.6	7.7	-51.9
2	2539.8	44.1	-13.0	-59.9	8.4	-51.5
3	3386.4	43.1	-13.0	-62.7	9.9	-52.8
ANTENNA POLARITY & TEST DISTANCE: VERTICAL AT 3 M						
No.	**Freq. (MHz)**	**Emission Level (dBuV)**	**Limit (dBm)**	**S.G Power Value (dBm)**	**Correction Factor (dB)**	**Power Value (dBm)**
1	1693.2	44.1	-13.0	-59.3	7.7	-51.6
2	2539.8	45.7	-13.0	-58.3	8.4	-49.9
3	3386.4	45.1	-13.0	-60.7	9.9	-50.8

Y-AXIS

MODE	TX channel 4233					
ANTENNA POLARITY & TEST DISTANCE: HORIZONTAL AT 3 M						
No.	**Freq. (MHz)**	**Emission Level (dBuV)**	**Limit (dBm)**	**S.G Power Value (dBm)**	**Correction Factor (dB)**	**Power Value (dBm)**
1	1693.2	43.3	-13.0	-60.1	7.7	-52.4
2	2539.8	48.2	-13.0	-55.8	8.4	-47.4
3	3386.4	45.2	-13.0	-60.6	9.9	-50.7
ANTENNA POLARITY & TEST DISTANCE: VERTICAL AT 3 M						
No.	**Freq. (MHz)**	**Emission Level (dBuV)**	**Limit (dBm)**	**S.G Power Value (dBm)**	**Correction Factor (dB)**	**Power Value (dBm)**
1	1693.2	47.8	-13.0	-55.6	7.7	-47.9
2	2539.8	46.6	-13.0	-57.4	8.4	-49.0
3	3386.4	46.5	-13.0	-59.3	9.9	-49.4

Z-AXIS

MODE	TX channel 4233					
ANTENNA POLARITY & TEST DISTANCE: HORIZONTAL AT 3 M						
No.	**Freq. (MHz)**	**Emission Level (dBuV)**	**Limit (dBm)**	**S.G Power Value (dBm)**	**Correction Factor (dB)**	**Power Value (dBm)**
1	1693.2	45.1	-13.0	-58.3	7.7	-50.6
2	2539.8	48.2	-13.0	-55.8	8.4	-47.4
3	3386.4	42.6	-13.0	-63.2	9.9	-53.3
ANTENNA POLARITY & TEST DISTANCE: VERTICAL AT 3 M						
No.	**Freq. (MHz)**	**Emission Level (dBuV)**	**Limit (dBm)**	**S.G Power Value (dBm)**	**Correction Factor (dB)**	**Power Value (dBm)**
1	1693.2	43.8	-13.0	-59.6	7.7	-51.9
2	2539.8	45.7	-13.0	-58.3	8.4	-49.9
3	3386.4	46.2	-13.0	-59.6	9.9	-49.7

REMARKS: 1. Output Power (dBm) = S.G Value (dBm) + Correction Factor (dB).
2. Correction Factor (dB) = Substitution Antenna Gain (dB) + Cable Loss (dB).

5 PHOTOGRAPHS OF THE TEST CONFIGURATION

Please refer to the attached file (Test Setup Photo).

6 INFORMATION ON THE TESTING LABORATORIES

We, Bureau Veritas Consumer Products Services (H.K.) Ltd., Taoyuan Branch, were founded in 1988 to provide our best service in EMC, Radio, Telecom and Safety consultation. Our laboratories are accredited and approved according to ISO/IEC 17025.

Copies of accreditation certificates of our laboratories obtained from approval agencies can be downloaded from our web site: www.adt.com.tw/index.5/phtml.
If you have any comments, please feel free to contact us at the following:

Linko EMC/RF Lab:
Tel: 886-2-26052180
Fax: 886-2-26051924

Hsin Chu EMC/RF Lab:
Tel: 886-3-5935343
Fax: 886-3-5935342

Hwa Ya EMC/RF/Safety/Telecom Lab:
Tel: 886-3-3183232
Fax: 886-3-3185050
Email: service.adt@tw.bureauveritas.com
Web Site: www.adt.com.tw

The address and road map of all our labs can be found in our web site also.

7 APPENDIX A – MODIFICATIONS RECORDERS FOR ENGINEERING CHANGES TO THE EUT BY THE LAB

No any modifications are made to the EUT by the lab during the test.

---END---