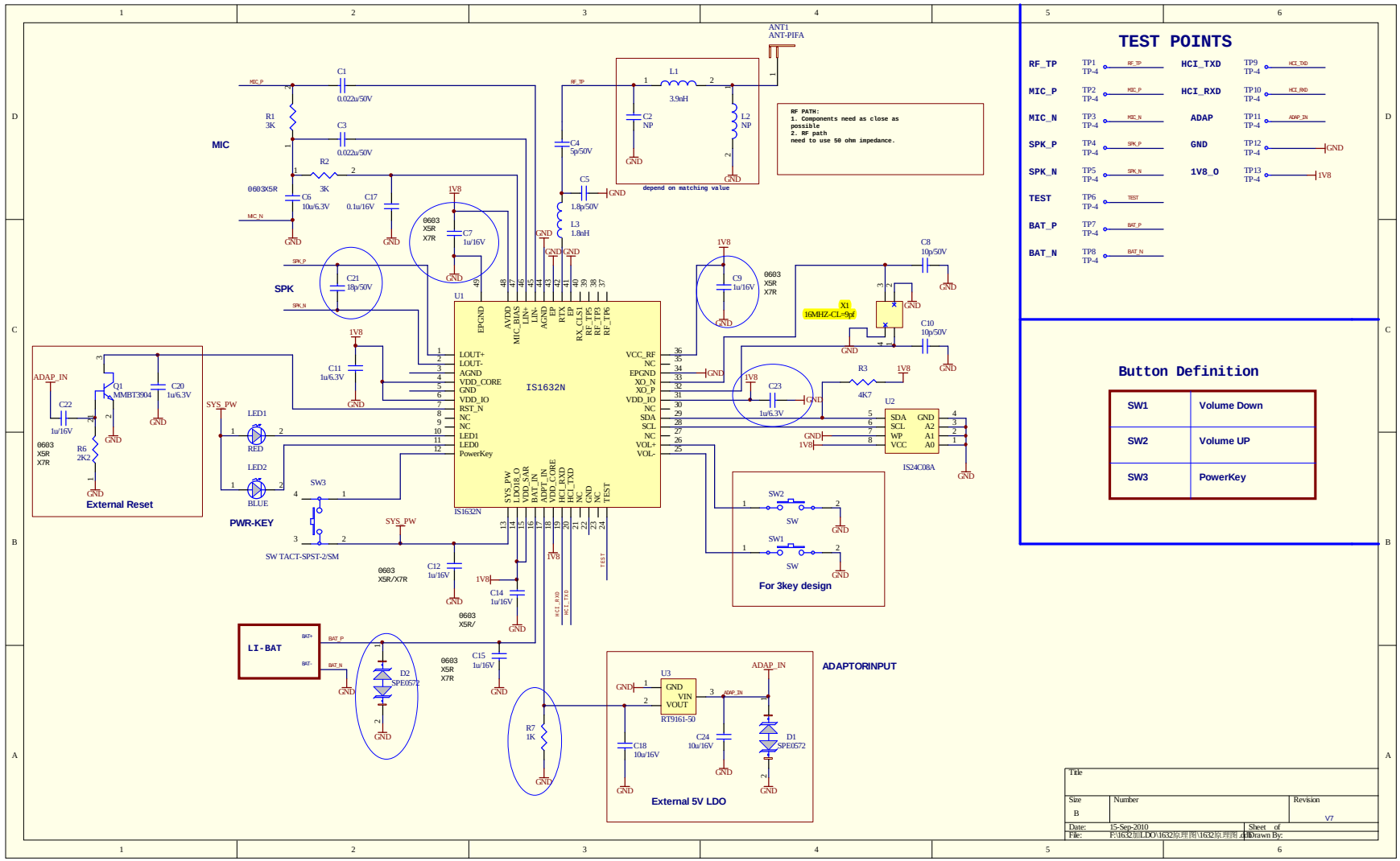
MIC
SPK
PWR-KEY
External Reset
LI-BAT
ADAPTORINPUT
External 5V LDO
For 3key design
IS1632N
IS24C08A
ANT1
ANT-PIFA
RF PATH:
1. Components need as close as possible
2. RF path need to use 50 ohm impedance.
depend on matching value
16MHZ-CL=9pf
SW TACT-SPST-2/SM
RT9161-50
TEST POINTS
RF_TP TP1 TP-4
MIC_P TP2 TP-4
MIC_N TP3 TP-4
SPK_P TP4 TP-4
SPK_N TP5 TP-4
TEST TP6 TP-4
BAT_P TP7 TP-4
BAT_N TP8 TP-4
HCI_TXD TP9 TP-4
HCI_RXD TP10 TP-4
ADAP TP11 TP-4
GND TP12 TP-4
1V8_O TP13 TP-4
Button Definition
SW1 Volume Down
SW2 Volume UP
SW3 PowerKey
Title
Size B
Number
Revision V7
Date: 15-Sep-2010
Sheet of
File: F:\16x2\ldo\ldo\16x32\原理图\16x2\原理图.ddb
Drawn By: