LC-282TX-2.4G (V175) PCB Transimtter Circuit Diagram
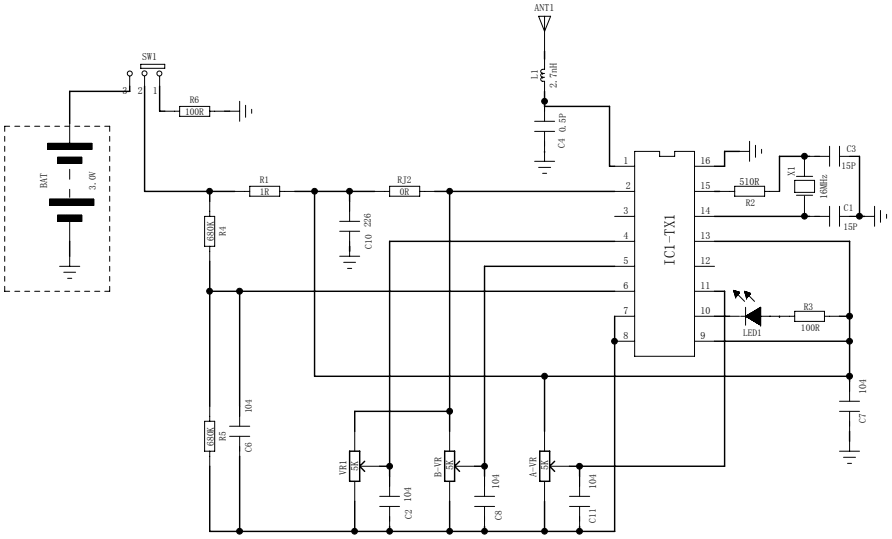
TX