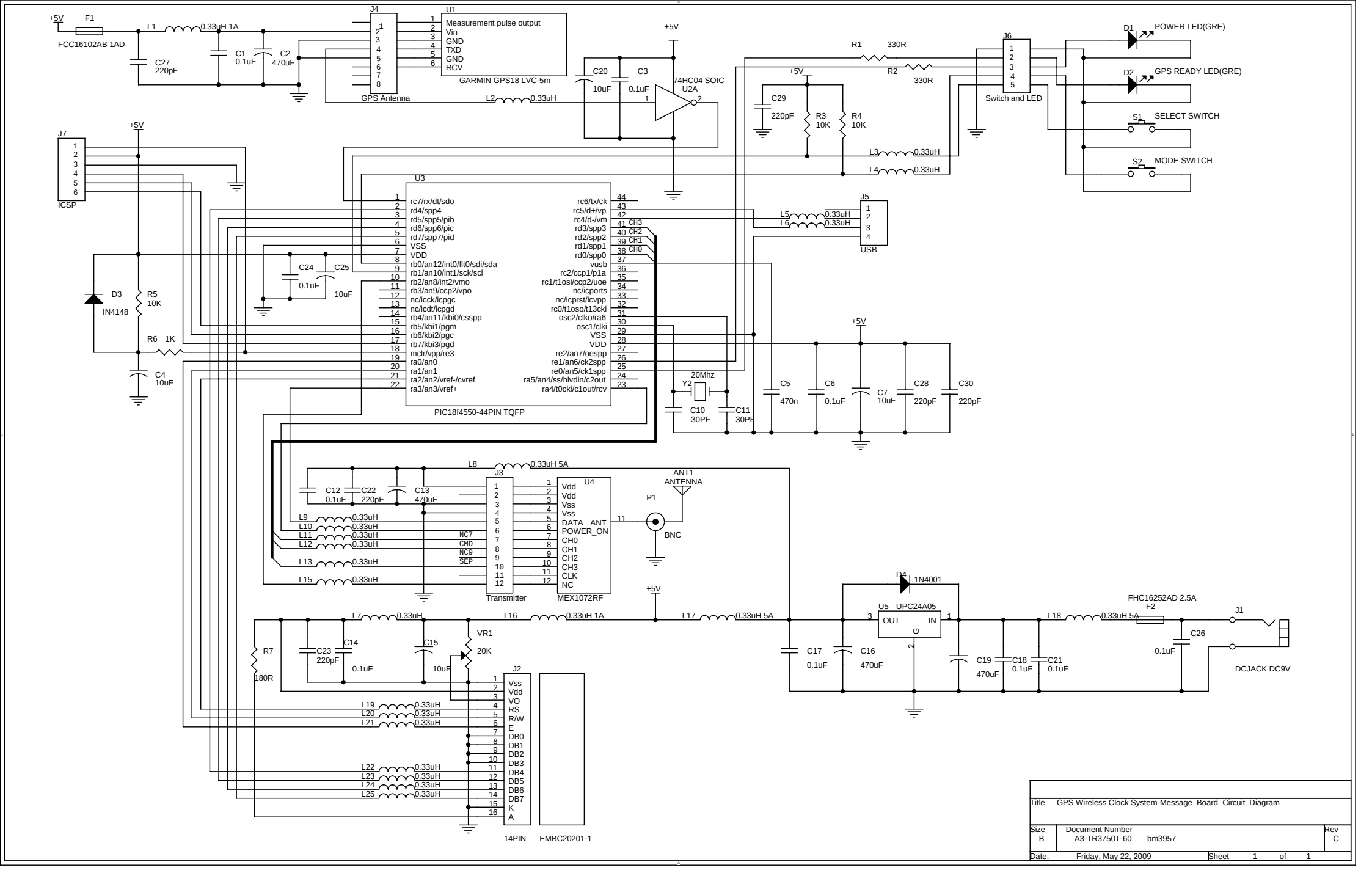

Title	GPS Wireless Clock System-Message Board Circuit Diagram	
Size B	Document Number A3-TR3750T-60 bm3957	Rev C
Date: Friday, May 22, 2009	Sheet 1 of 1	

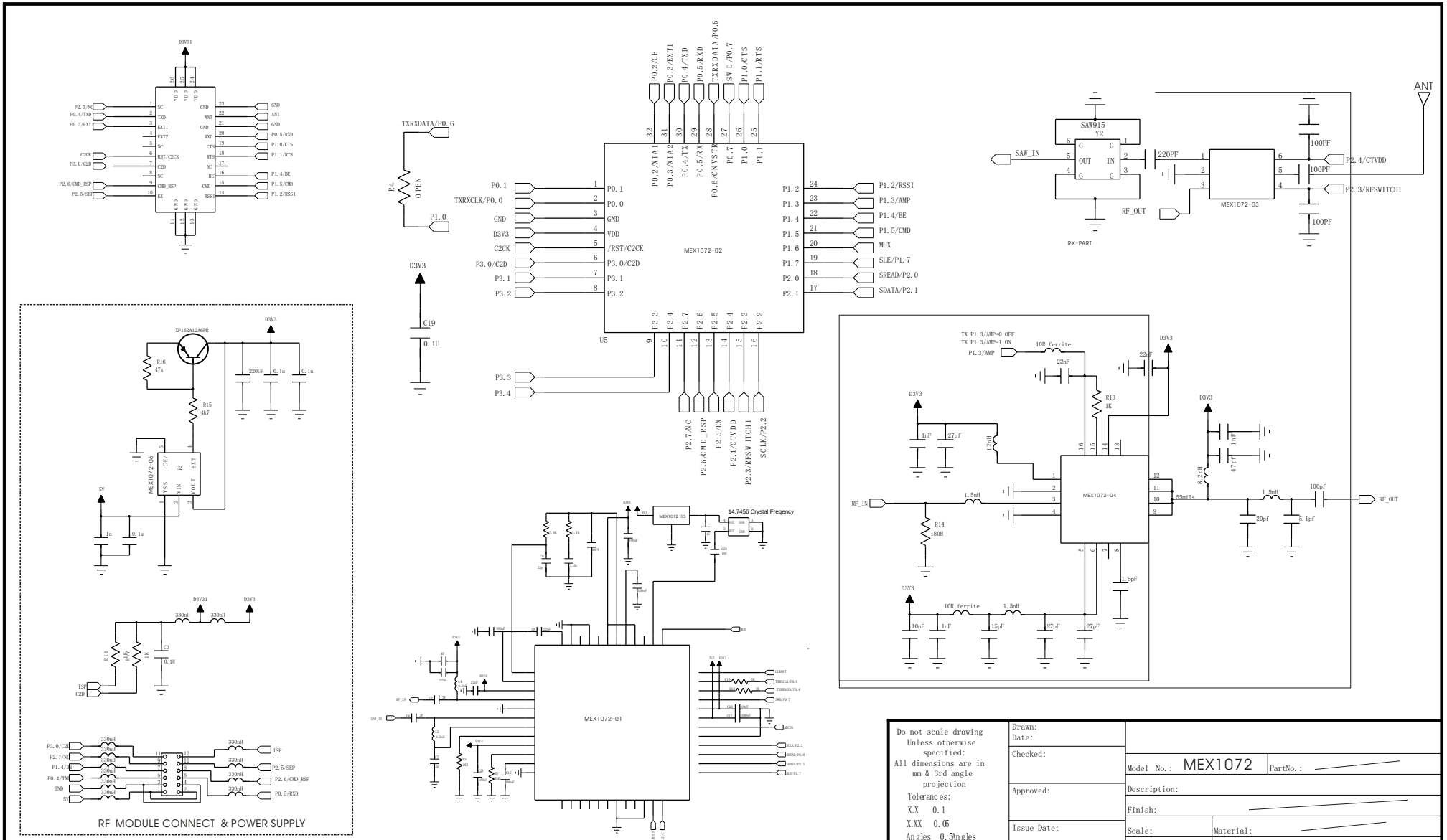
MEX1072-01
MEX1072-02
MEX1072-03
MEX1072-04
MEX1072-05
MEX1072-06
U5
D3V3
D3V31
ANT
SAW915
Y2
SAW_IN
RF_OUT
RX-PART
RF_IN
TXRXDATA/P0.6
TXRXCLK/P0.0
P0.1
GND
VDD
/RST/C2CK
P3.0/C2D
P3.1
P3.2
P3.3
P3.4
P1.2/RSSI
P1.3/AMP
P1.4/BE
P1.5/CMD
P1.6
MUX
P1.7
P2.0
P2.1
SLE/P1.7
SREAD/P2.0
SDATA/P2.1
P2.4/CTVDD
P2.3/RFSWITCH1
14.7456 Crystal Freqency
RF MODULE CONNECT & POWER SUPPLY
Do not scale drawing
Unless otherwise specified:
All dimensions are in mm & 3rd angle projection
Tolerances:
X.X 0.1
X.XX 0.05
Angles 0.5Angles
Drawn:
Date:
Checked:
Approved:
Issue Date:
Model No.: MEX1072
PartNo.:
Description:
Finish:
Scale:
Material:
Format: A4
Drawing No.:
Qty/set: 1
QC/IQC Ref.: "*"