WiFi module

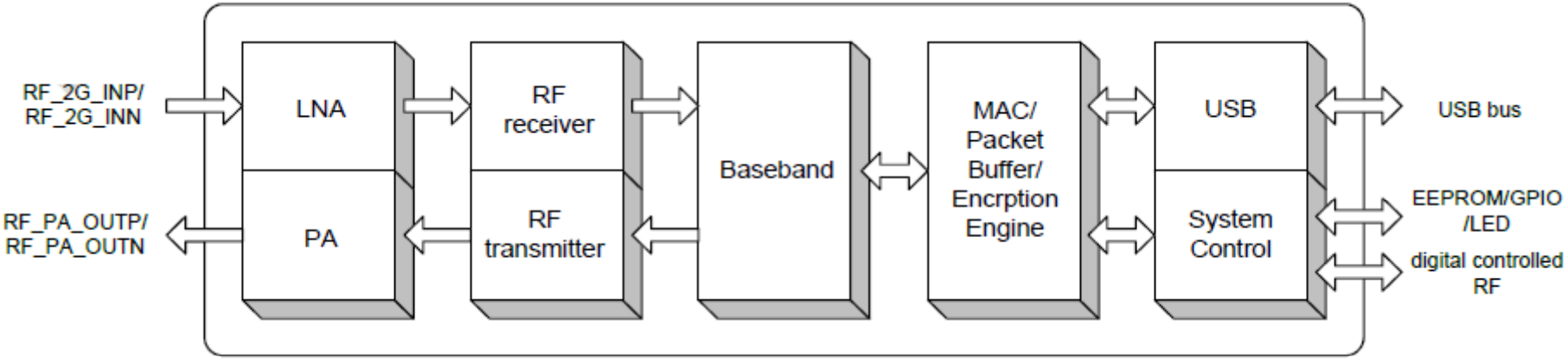
RF_2G_INP/
RF_2G_INN
RF_PA_OUTP/
RF_PA_OUTN
LNA
PA
RF
receiver
RF
transmitter
Baseband
MAC/
Packet
Buffer/
Encrption
Engine
USB
System
Control
USB bus
EEPROM/GPIO
/LED
digital controlled
RF

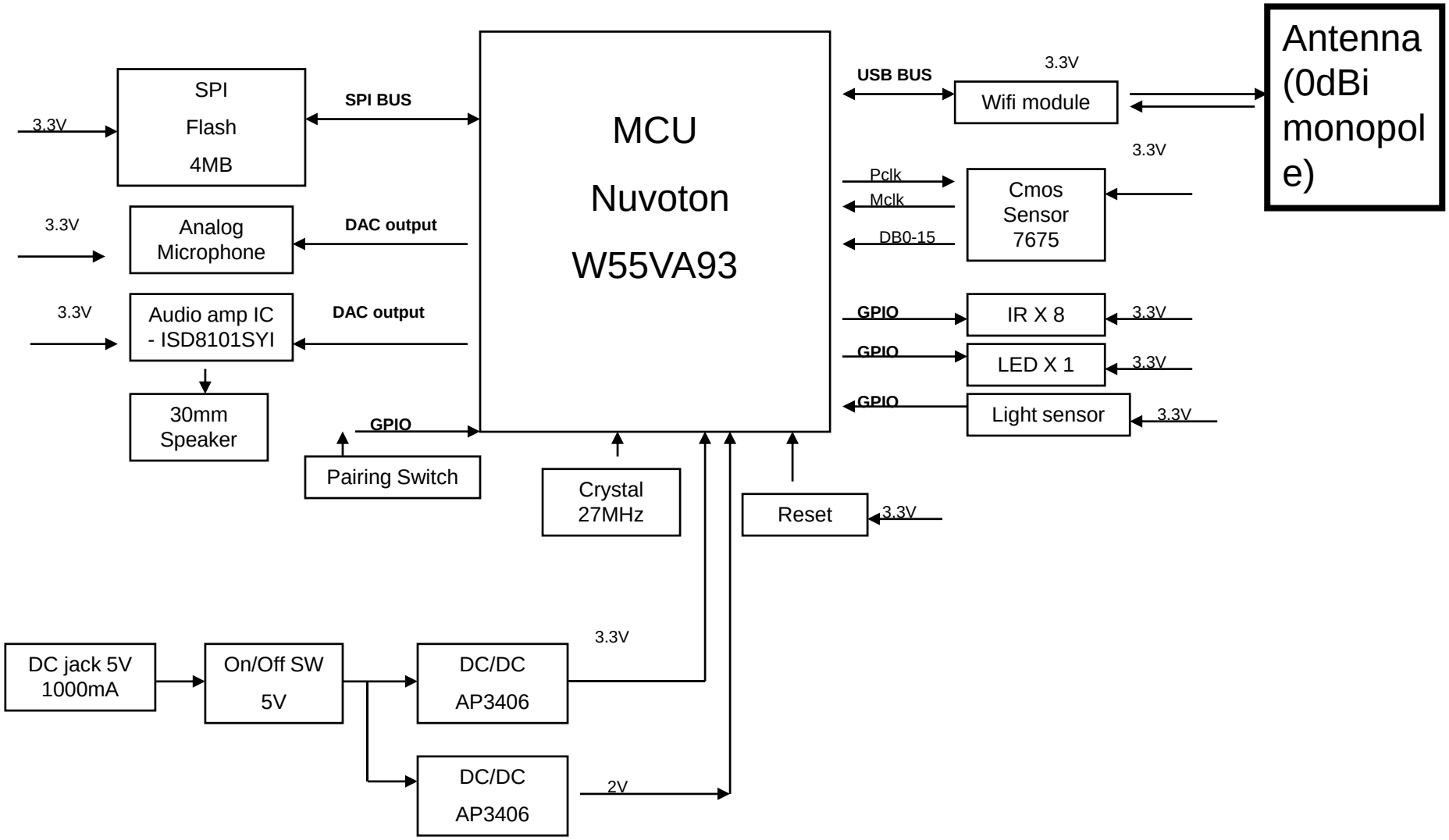
SPI
Flash
4MB
3.3V
SPI BUS
MCU
Nuvoton
W55VA93
USB BUS
3.3V
Wifi module
Antenna (0dBi monopole)
3.3V
Analog Microphone
DAC output
Pclk
Mclk
DB0-15
Cmos Sensor 7675
3.3V
Audio amp IC - ISD8101SYI
DAC output
GPIO
IR X 8
3.3V
GPIO
LED X 1
3.3V
30mm Speaker
GPIO
Light sensor
3.3V
GPIO
Pairing Switch
Crystal 27MHz
Reset
3.3V
DC jack 5V 1000mA
On/Off SW
5V
DC/DC
AP3406
3.3V
DC/DC
AP3406
2V