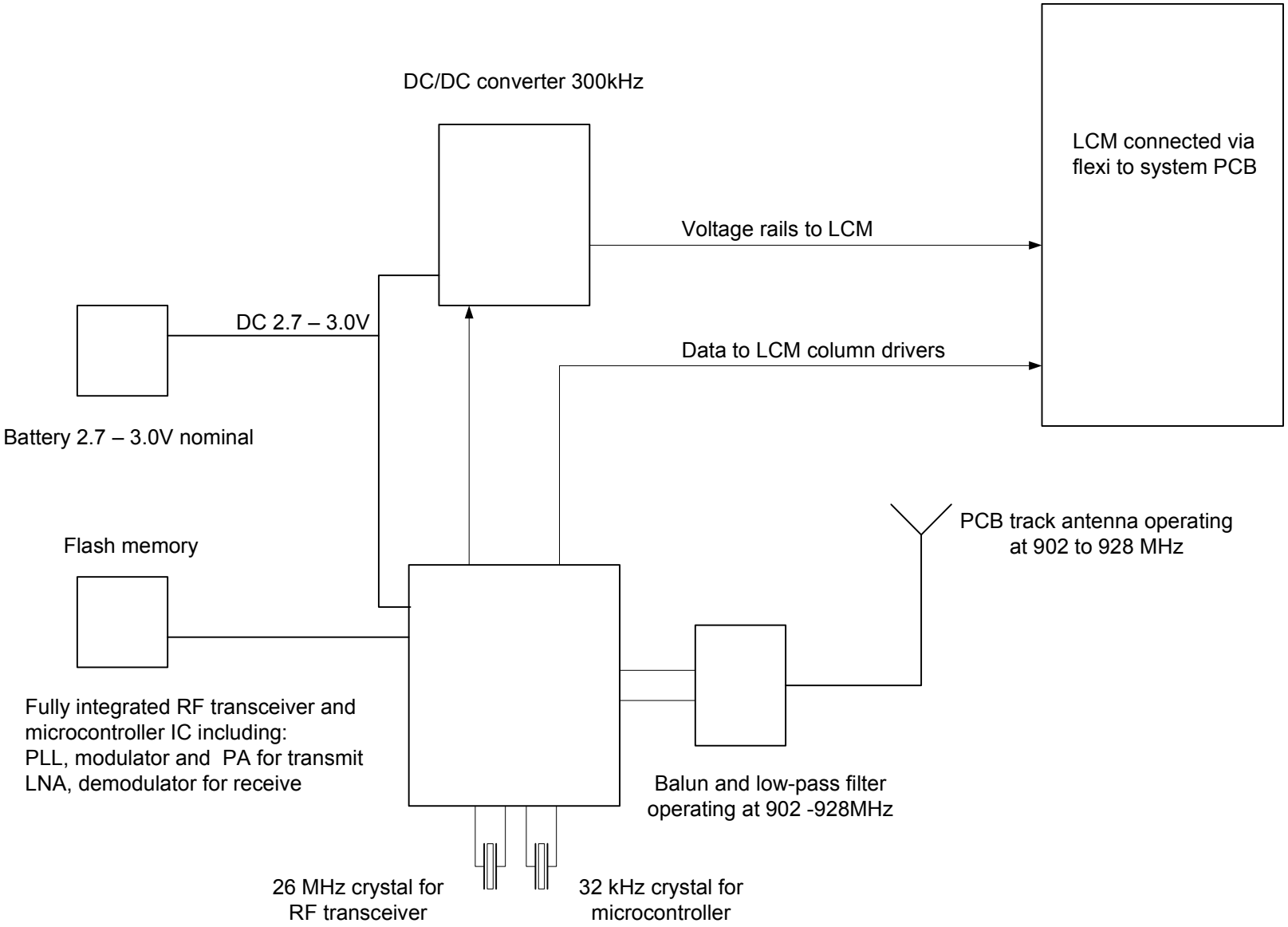EPOP 900 BLOCK DIAGRAM