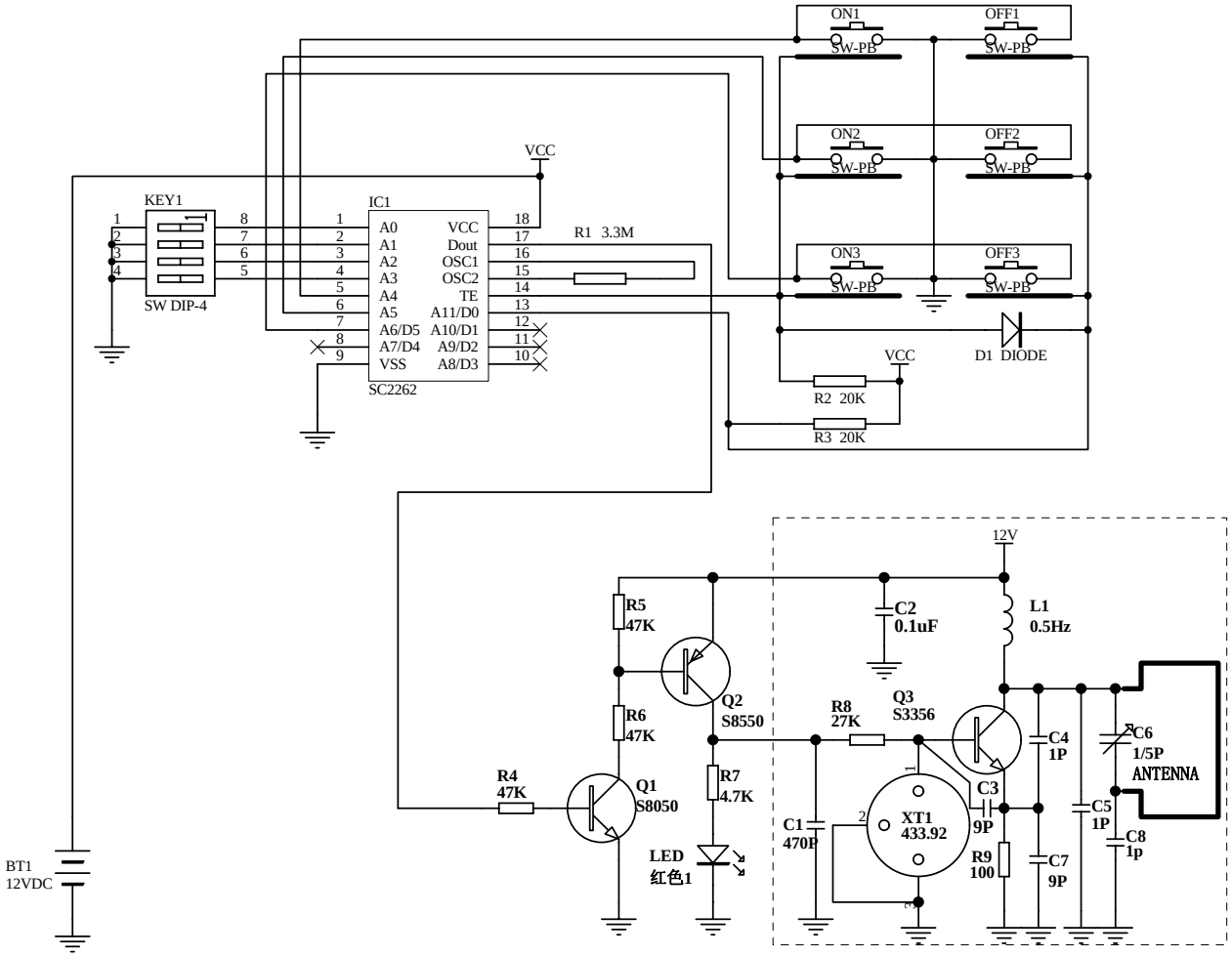
Transmitter
ON1
OFF1
SW-PB
ON2
OFF2
ON3
OFF3
VCC
KEY1
SW DIP-4
IC1
A0
A1
A2
A3
A4
A5
A6/D5
A7/D4
VSS
VCC
Dout
OSC1
OSC2
TE
A11/D0
A10/D1
A9/D2
A8/D3
SC2262
R1 3.3M
D1 DIODE
R2 20K
R3 20K
12V
R5
47K
R6
47K
Q2
S8550
R4
47K
Q1
S8050
R7
4.7K
LED
红色1
BT1
12VDC
C2
0.1uF
L1
0.5Hz
R8
27K
Q3
S3356
C4
1P
C6
1/5P
ANTENNA
C3
9P
C5
1P
C8
1p
C1
470P
XT1
433.92
R9
100
C7
9P