ATTACHMENT C.

- BLOCK DIAGRAM -
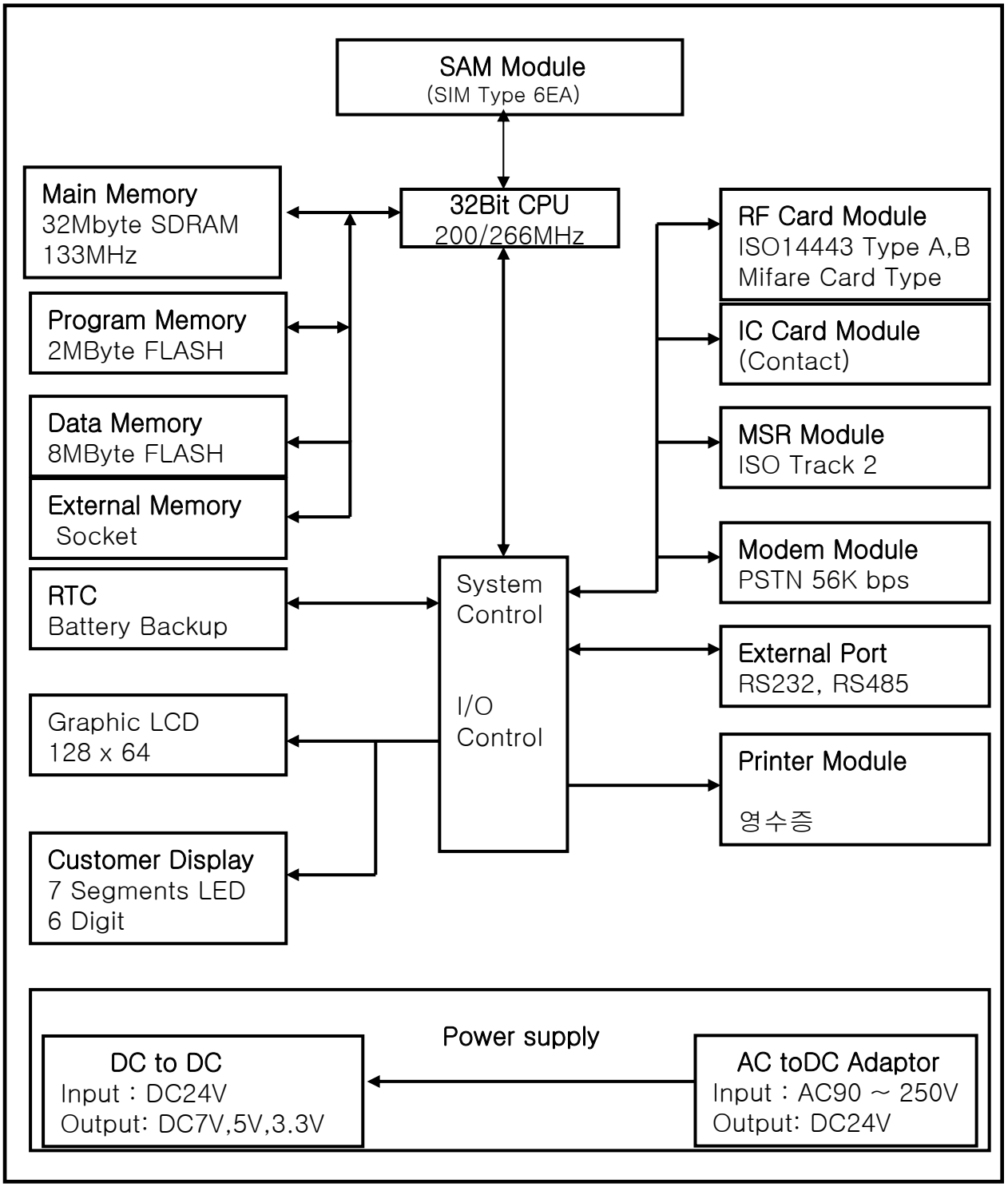
ECR-300 충전기 Block Diagram