User Manual

FCC ID: VA8-NAPOLEON19

IC: 7114A-NAPOLEON19

Model Name:NEFL42B-BT

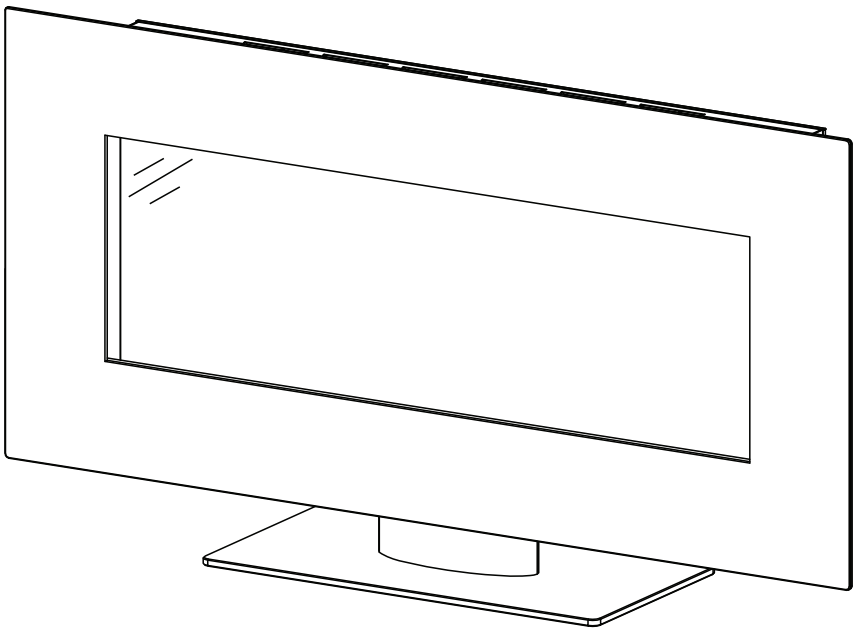

SAFETY INFORMATION

⚠ WARNING

FIRE OR EXPLOSION HAZARD

If the information in these instructions are not followed exactly, a fire or explosion may result causing property damage, personal injury, or loss of life.

- Do not store or use gasoline or other flammable vapors and liquids in the vicinity of this or any other appliance.

INSTALLER:

Leave this manual with the appliance

CONSUMER:

Retain this manual for future reference

This appliance has a remote that requires button batteries that are hazardous to young children.

FOR INDOOR USE ONLY

CERTIFIED TO THE CANADIAN AND AMERICAN NATIONAL STANDARDS: CSA 2.22 NO. 46 / UL 2021

Quality System Certified To ISO 9001:2015

C SP US

APPLY SERIAL NUMBER LABEL FROM CARTON

Serial No. XXXXXX000000

MODEL NO.

$10.00

safety information

⚠ WARNING

- **If equipped with a heater, this appliance can be hot when operated and can cause severe burns if contacted.**
- Do not operate appliance before reading and understanding operating instructions. Failure to operate appliance according to operating instructions could cause fire or injury.
- Do not install damaged, incomplete or substitute components.
- Do not burn wood or other materials in this appliance.
- All electric appliances have hot and arcing or sparking parts inside. Do not use it in areas where a gas line, paint or flammable liquids are present.
- Any safety screen or guard removed for servicing must be replaced prior to operating the appliance.
- It is imperative that the control compartments, circulating blower and its passageway in the appliance are kept clean. The appliance should be inspected before use and at least annually by a qualified service person. More frequent cleaning may be required due to excessive lint from carpeting, bedding material, etc. The appliance area must be kept clear and free from combustible materials, gasoline and other flammable vapors and liquids.
- Under no circumstances should this appliance be modified.
- Do not use this appliance if any part has been under water. Immediately call a qualified service technician to inspect the appliance and to replace any part of the control system which has been under water.
- If equipped with a glass door, do not operate the appliance with the glass door removed, cracked or broken. Replacement of the glass should be done by a licensed or qualified service person. Do not strike or slam shut the appliance glass door.
- Keep the packaging material out of reach of children and dispose of the material in a safe manner. As with all plastic bags, these are not toys and should be kept away from children and infants.
- Servicing should be done only while the appliance is disconnected from the power supply circuit.
- Always unplug appliance when not in use.
- Do not operate this appliance with a damaged cord or plug after the appliance malfunctions, has been dropped or damaged in any manner. Return appliance to authorized service facility for examination, electrical or mechanical adjustment, or repair.
- Do not use outdoors.
- When installing this appliance in a room where water is present, the installation must comply with codes recognizing the increased hazard of electrical shock and electrocution.

note:
This appliance is NOT suitable for installation in a bathroom.

- Do not run cord under carpeting. Do not cover cord with throw rugs, runners, or the like. Arrange cord away from traffic area and where it will not be tripped over.
- Connect to properly grounded outlets only.
- Do not insert or allow foreign objects to enter any ventilation or exhaust opening as this may cause an electric shock or fire, or damage the appliance.
- It is normal for your electric appliance to produce noise, especially when installed in a quiet space such as a bedroom.

⚠ WARNING

- To prevent a possible fire, do not block air intakes or exhaust in any manner. Do not use on soft surfaces, like a carpet, where openings may become blocked.
- Always plug appliances directly into a wall outlet/receptacle. Never use an extension cord or relocatable power tap (outlet/power strip).
- These appliances are tested and listed for use only with the optional accessories listed in these instructions. Use of optional accessories not specifically tested for this appliance could void the warranty and/or result in a safety hazard.

For appliances equipped with a heater:

- Risk of burns. Power to the appliance should be turned off and the appliance allowed to cool before servicing. To disconnect power to the appliance, turn controls to off, then remove plug from outlet.
- Young children should be carefully supervised when they are in the same room as the appliance. Toddlers, young children and others may be susceptible to accidental contact burns. A physical barrier is recommended if there are at risk individuals in the house. To restrict access to an appliance or stove, install an adjustable safety gate to keep toddlers, young children and other at risk individuals out of the room and away from hot surfaces.
- Clothing or other flammable material should not be placed on or near the appliance.
- Due to high temperatures, the appliance should be located out of traffic and away from furniture and draperies.
- Ensure you have incorporated adequate safety measure to protect infants/toddlers from touching hot surfaces.
- Even after the appliance is off, the glass and/or screen will remain hot for an extended period of time.
- Check with your local hearth specialty dealer for safety screens and hearth guards to protect children from hot surfaces. These screens and guards must be fastened to the floor.
- Ensure clearances to combustibles are maintained when building a mantel or shelves above the appliance. Elevated temperatures on the wall or in the air above the appliance can cause melting, discolouration or damage to decorations, a TV or other electronic components.

⚠ WARNING: This product can expose you to chemicals including lead and lead compounds, which are known to the State of California to cause cancer, and chemicals including BBP and DEHP, which are known to the State of California to cause birth defects or other reproductive harm. For more information, go to www.P65Warnings.ca.gov.

table of contents

1.0 general information 5
- 1.1 dimensions 5
- 1.2 rating plate information 6
- 1.3 label location 6
- 1.4 listing approvals 7
- 1.5 general instructions 7
- 1.6 unpacking and testing the appliance 8
- 1.7 hardware list 8

2.0 appliance placement 9
- 2.1 grounding appliance 9

3.0 installation 10
- 3.1 minimum clearance to combustibles 10
- 3.2 installing the appliance 11
  - 3.2.1 wall mount installation 11
  - 3.2.2 optional glass stand 12

4.0 finishing 13
- 4.1 front surround removal / installation 13
- 4.2 crystal / pebble media installation 13
- 4.3 log installation / removal 14

5.0 maintenance 14
- 5.1 cleaning 14

6.0 operating instructions 15
- 6.1 operating control panel and remote control 15
- 6.2 Bluetooth connection 16
- 6.3 LED back lights 16
- 6.4 remote battery installation 17

7.0 electrical information 18
- 7.1 wiring diagram 18

8.0 replacement parts 19
- 8.1BEF-42WM01 overview 20

9.0 troubleshooting 21

10.0 warranty 23

note:

The information throughout this manual is believed to be correct at the time of printing. Wolf Steel Ltd. reserves the right to change or modify any information within this manual at any time without notice. Changes, other than editorial, are denoted by a vertical line in the margin.

1.1 dimensions

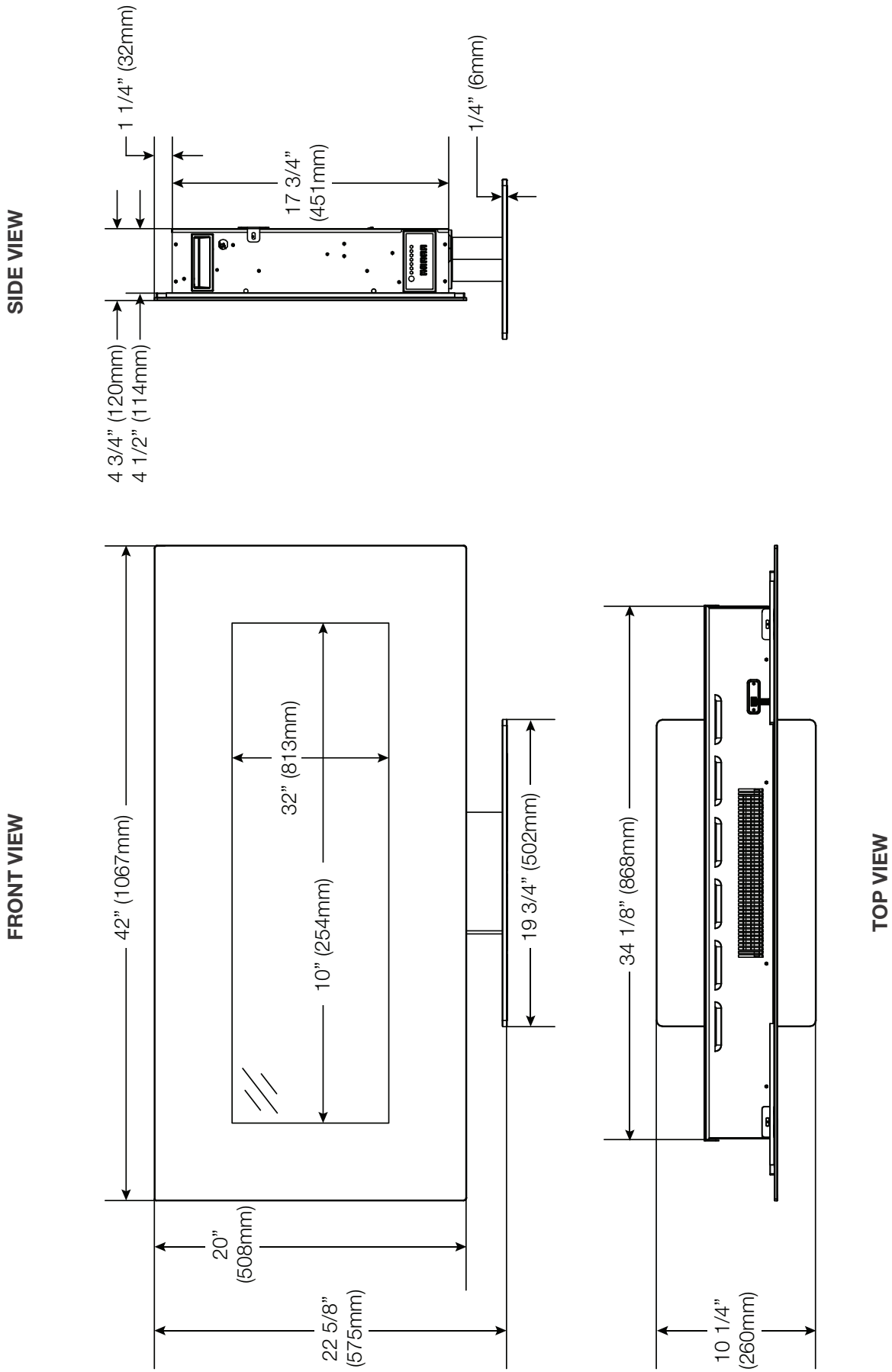

general information

1.2 rating plate information

The below illustration is for reference only. Refer to the appliance rating plate for accurate information.

CERTIFIED UNDER CANADIAN AND AMERICAN NATIONAL STANDARD: CSA 22.2 NO. 46 AND UL 2021 /
HOMOLOGUÉ SELON LES NORMES NATIONALES CANADIENNES ET AMÉRICAINES:CSA 22.2 NO. 46 UL 2021

ELECTRIC FIREPLACE. SUITABLE FOR BEDROOM AND BED-SITTING ROOM INSTALLATION.

FOYER À ÉLECTRIQUE. HOMOLOGUÉ POUR INSTALLATION DANS UNE CHAMBRE À COUCHER, UNE SALLE DE BAIN ET UN STUDIO.

C US

MASTER CONTRACT: 161746

CONTRAT-CADRE: 161746

☐ BEF-42WM01 **MODEL** ☐ BEF-50BI02

VOLTAGE: 120VAC
FREQUENCY: 60Hz
POWER: 1500W
DATE CODE:

TENSION: 120VAC
FRÉQUENCE: 60Hz
PUISSANCE: 1500W
CODE DE DATE:

DESIGNED IN NORTH AMERICA
BY WOLF STEEL LTD.
MADE IN CHINA

DÉSIGNÉ AMÉRIQUE DU NORD
PAR WOLF STEEL LTD.
FABRIQUÉ EN CHINE

SERIAL NUMBER/NO. DE SÉRIE: [redacted]

note:

The rating plate must remain with the appliance at all times. It must not be removed.

1.3 label location

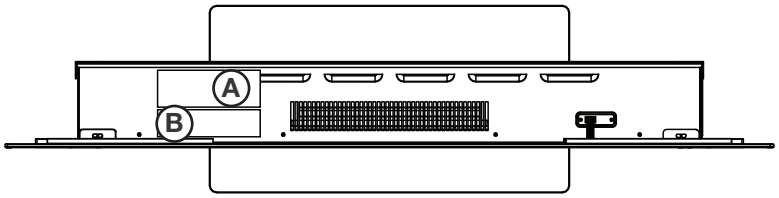

TOP VIEW

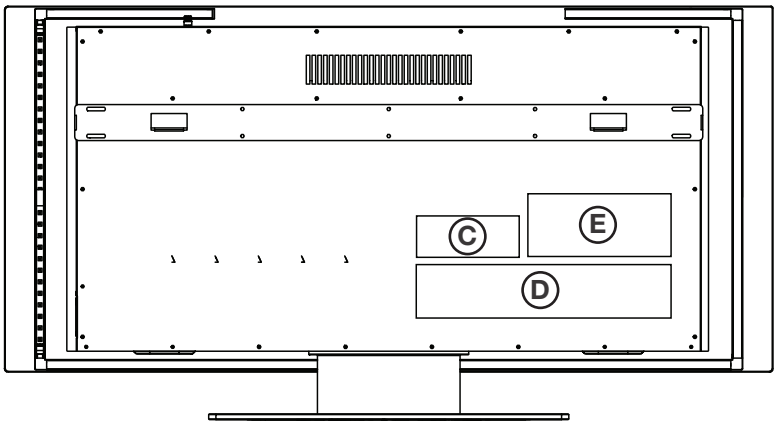

BACK VIEW

Ref.	Part Number	Label Description
A	W385-2017	“Hot Surface”
B	W385-2210	“Do Not Cover”
C	W385-1945	Caution
D	W385-1944	Warning
E	W385-2375	Rating Plate

1.4 listing approvals

This appliance has been tested in accordance with the CSA Standards for fixed and location-dedicated electric room appliances in the United States and Canada. If you need assistance during installation, please contact your local dealer.

note:

This appliance must be electrically wired and grounded in accordance with local codes or, in the absence of local codes, with National Electric Code ANSI/NFPA 70-latest edition in the United States or the Canadian Electric Code, CSA C22.1 in Canada

Model Number	BEF-42WM01
Description	Wall-mount appliance with optional stand
Voltage	120V AC
Watts	Max 1500W
Amps	Dedicated 15 AMP Grounded Circuit
Appliance Width	42” (1067mm)
Appliance Height	20” (508mm) without stand
Appliance Depth	4 3/4” (120mm) without stand
Net Weight	35 lbs (15.8kg)
Gross Weight	42 lbs (19kg)

1.5 general instructions

WARNING

- Read these instructions completely before beginning installation. Failure to follow them could cause an appliance malfunction resulting in serious injury and/or property damage.
- All electric appliances have hot and arcing or sparking parts inside. Do not use it in areas where gasoline, paint, or flammable liquids are present.
- This electric appliance is tested and listed for use only with the optional accessories listed in these instructions. Use of optional accessories not specifically tested for this electric appliance could void the warranty and/or result in a safety hazard.
- Do not open. Risk of electric shock. No user-serviceable parts inside.
- Do not use damaged electrical cords.
- Servicing should be done only while the appliance is disconnected from the power supply circuit.
- To prevent electric shock, match the wide blade of plug to wide slot of receptacle and fully insert.

- Prior to plugging your appliance into an electrical outlet, verify that the house circuit breakers for the outlet are on.
- The appliance may emit a slight, harmless odour when first used. This odour is normal and it is caused by the initial heating of internal appliance elements and will not occur again.
- If your appliance does not emit heat when called for, consult the “operation” section of this manual for further information.
- Use with a CSA or UL certified surge protector.
- Do not route the power cord directly underneath the appliance.

This electric appliance meets the construction and safety standards of H.U.D. for application in manufactured homes when installed according to these instructions.

As with most electronic devices, your new electric appliance has been designed to operate at temperatures between 5°C (41°F) and 35° C (95°F). During the colder winter months, allow the appliance to reach room temperature before turning it on.

general information

1.6 unpacking and testing the appliance

Carefully remove the appliance from the box and remove the support brackets. Prior to installing the appliance, remove all packaging material and test to make sure the appliance operates properly by plugging the power supply cord into a conveniently located 120V, 15 Amp minimum grounded outlet.

1.7 hardware list

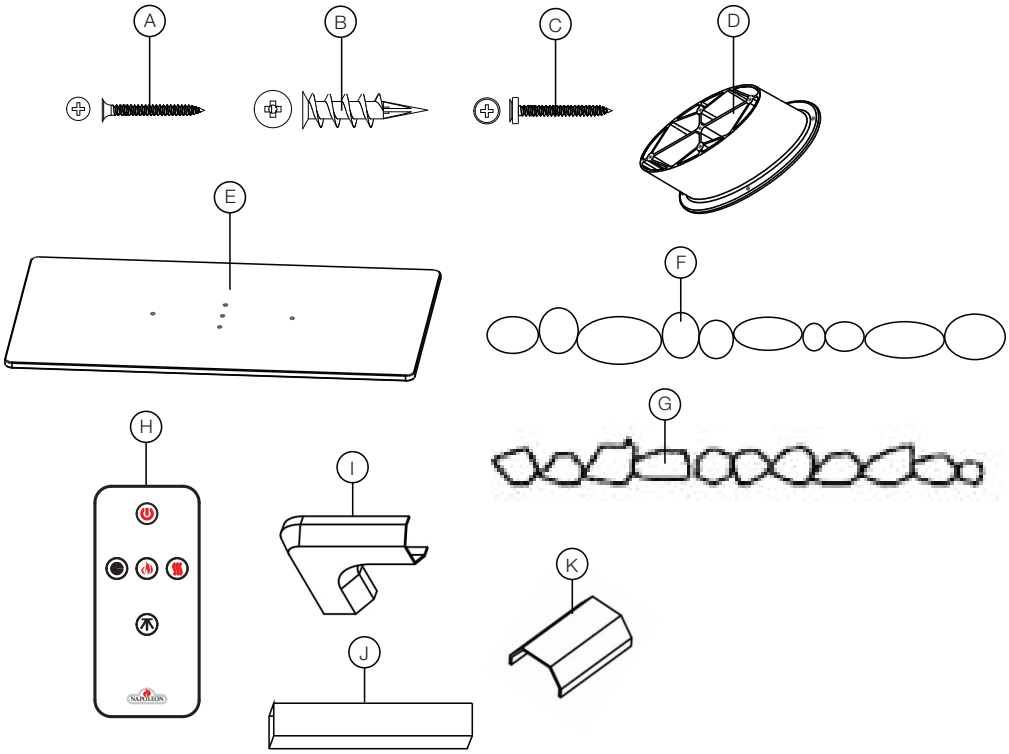

Ref.	Description	Quantity
A	Flat head screw	6
B	Drywall anchor	6
C	Phillips head screw	5
D	Center stand piece	1
E	Tempered glass base	1
F	Pebbles (bag)	1
G	Crystals (bag)	1
H	Remote control	1
I	Cord corner	2
J	Straight cord cover connector	2
K	Cord cover	2

note:

Only hardware supplied with the appliance will be illustrated.

2.0 appliance placement

⚠ WARNING

- Due to high temperatures, this electric appliance should be located out of traffic. Keep combustible materials such as furniture, pillows, bedding, papers, clothes, and curtains at least 36" from the front of the appliance.
- Never located this electric appliance where it may fall into a bathtub or other water container.
- Wear safety gloves, safety glasses, and safety footwear for protection during installation and maintenance.
- To prevent contact with sagging or loose insulation, the electric appliance must not be installed against vapor barrier or exposed insulation. Localized overheating could occur and a fire could result.
- Do not expose the electric appliance to the elements (such as rain, etc.)

2.1 grounding appliance

This appliance is for use on 120 volts. The cord has a plug as shown in (A). An adapter as shown in (C) is available for connecting three-blade grounding type plugs to two-slot receptacles, as shown in (B).
The green grounding plug extending from the adapter must be connected to a permanent ground such as a properly grounded outlet box. The adapter should not be used if a three-slot grounded receptacle is available.

To disconnect appliance, turn controls to off, then remove plug from outlet.

Grounding Methods

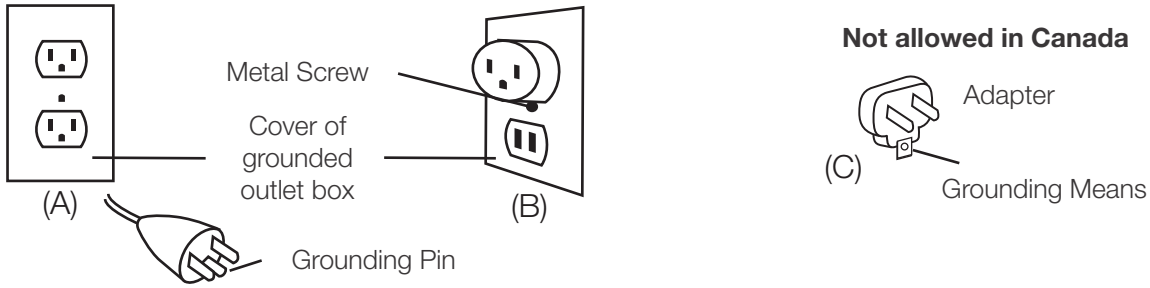

note:
The appliance must be connected to a dedicated 15 amp circuit. The use of an extension cord is NOT permitted.

3.0 installation

⚠ WARNING

- Risk of fire! The power cord must not be pinched against a sharp edge. Secure cord to avoid tripping or snagging to reduce the risk of fire, electric shock, or personal injury. Do not run cord under carpeting. Do not cover cord with throw rugs, runners, or similar items. Arrange cord away from traffic areas and where it will not be tripped over.
- Risk of fire! To prevent a possible fire, do not block air intake or exhaust in any manner. Do not use on soft surfaces where openings may become blocked.
- Risk of fire! Do not blow or place insulation against the appliance.
- This electric appliance is tested and listed for use only with the approved optional accessories. Use of optional accessories not specifically tested for this electric appliance could void the warranty and/or result in a safety hazard.
- If the information in these instructions is not followed exactly, a fire or explosion may result causing property damage, personal injury, or death. Do not store or use gasoline or other flammable vapors in the vicinity of this or any other appliance.
- This appliance is heavy. It is highly recommended that two people install this appliance.
- If your appliance is equipped with a heater, ensure the heater vents cannot, in any way, be covered as it may create a fire hazard.
- Do not run the power cord horizontally, directly below the appliance.

Your NEFL42B-BT can be wall-mounted or installed with a stand. Select a suitable location that is not susceptible to moisture and is away from drapes, furniture and high traffic areas.

note:
Follow all national and local electrical codes.

3.1 minimum clearance to combustibles

⚠ WARNING

- When using paint or lacquer to finish a mantel, the paint or lacquer must be heat resistant to prevent discoloration.

note:
The power switch is located on the top left hand side of the appliance. Ensure to maintain access to this switch at all times.

Measurements are taken from the glass front.	
Bottom	2” (51mm)
Sides	6” (152mm)
Back	0”
Top	39” (1000mm) to ceiling
	39” (1000mm) to mantel

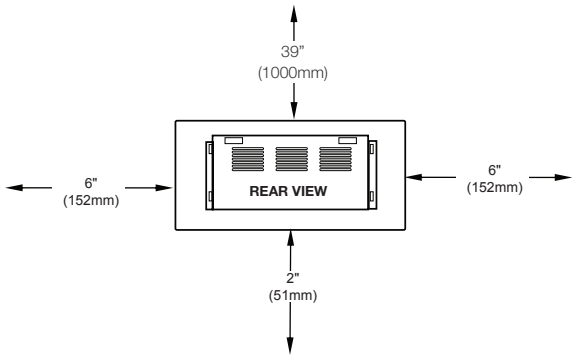

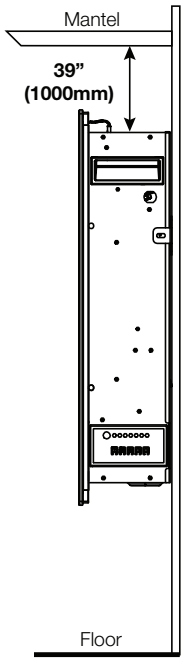

Side View (Wall Mount)

3.2 installing the appliance

3.2.1 wall mount installation

note:
The wall bracket is fixed on the back of the appliance.

Due to the many different materials used on different walls, it is highly recommended that you consult your local builder before you install this appliance on the wall.

A. Select a location that is not prone to moisture and is located at least 3 feet (1m) away from combustible materials such as curtain drapes, furniture, bedding, paper, etc.

B. Remove the front surround (see “front surround removal / installation” section).

C. Have two people hold the appliance against the wall to determine the final location.

D. Place the appliance face down on a soft, non-abrasive surface. Remove the wall mounting bracket from the back of the appliance by removing the screws **(Fig. 3-1)**. Set the bracket and screws aside.

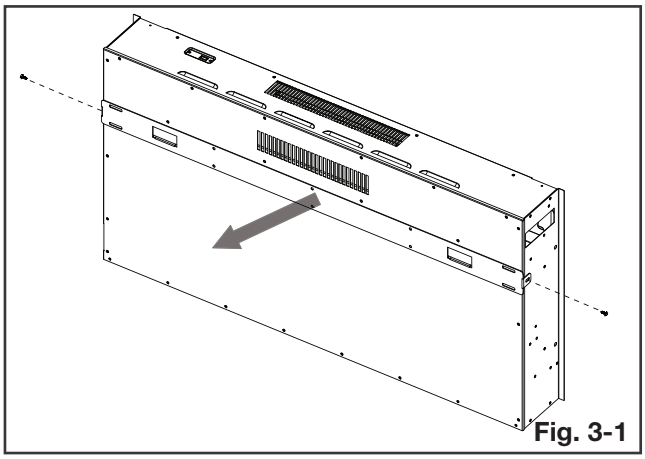

Fig. 3-1

E. Mark out the location, then mount the wall mounting bracket onto the wall using 6 screws (supplied). This bracket MUST have the hooks facing upwards and be level. **A x 6**

note:
It is strongly recommended that the mounting bracket be screwed into the wall studs where possible. If the wall studs cannot be used, ensure that the supplied plastic anchors are used to affix the bracket to the wall and the bracket is adequately secured.

F. With the wall mounting bracket installed, have two people lift the appliance up and insert the two hooks on the bracket into the two slots on the back of the applinace **(Fig. 3-2)**.

G. Secure the appliance to the wall bracket using screws previously removed in step D **(Fig. 3-3)**.

H. Check the appliance for stability, ensuring that the bracket will not pull free from the wall.

I. Reinstall the front surround.

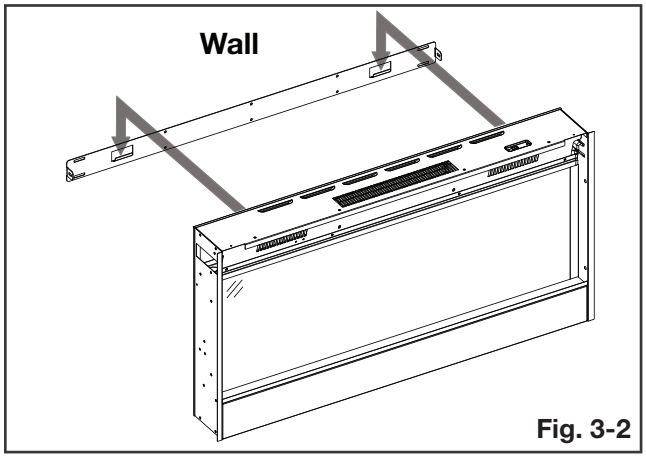

Fig. 3-2

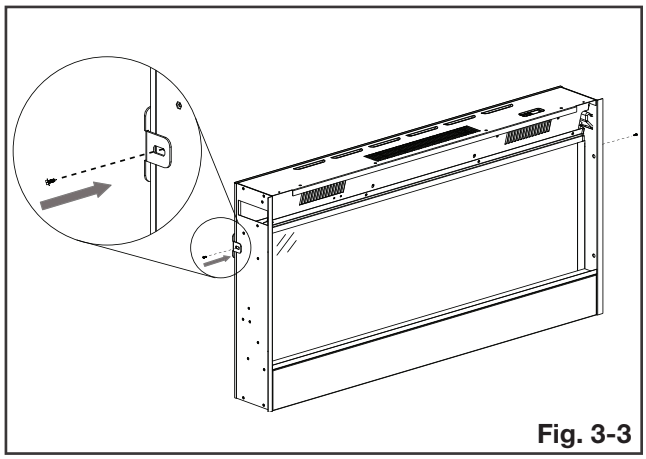

Fig. 3-3

installation

3.2.2 optional glass stand

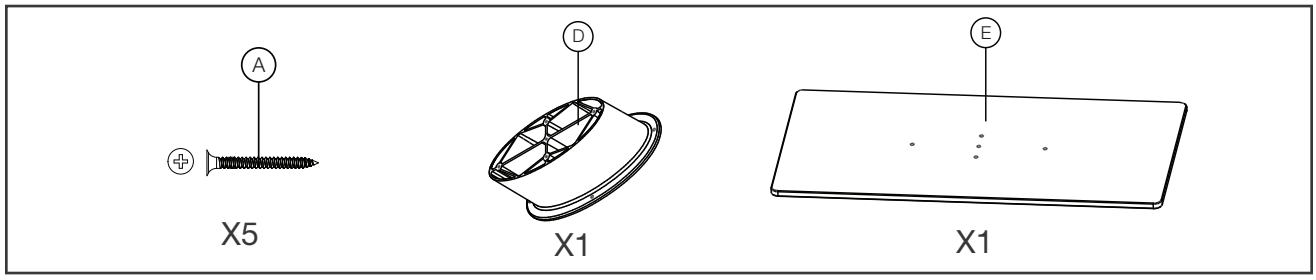

A. Remove the front surround (see “front surround removal / installation” section).

B. Place appliance on a soft clean surface.

C. Remove the four screws from the bottom of the appliance **(Fig. 3-3)**. Set screws aside.

D. Align the center stand piece to the bottom holes and secure it into the appliance using the screws previously removed in step D **(Fig. 3-4)**.

E. Prepare the glass base, ensuring that the rubber feet of the glass base are facing away of the appliance.

F. Secure the glass base into the center piece using 5 screws (supplied) **(Fig. 3-5)**.

G. Check if the glass stand is secured properly. Ensure appliance is standing straight and still **(Fig. 3-6)**.

H. Install media (see “finishing” section).

I. Reinstall the front surround.

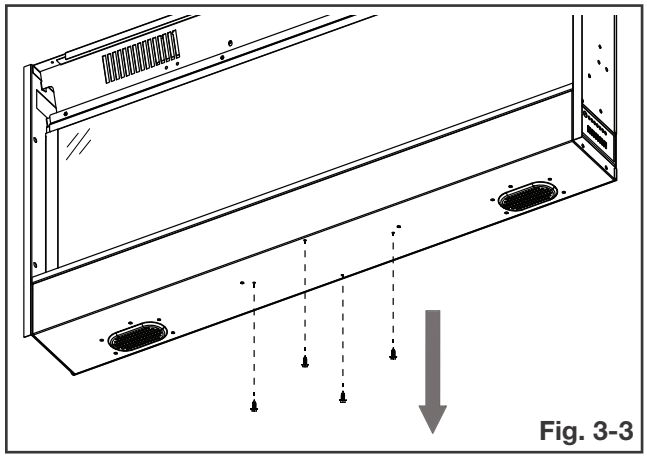

Fig. 3-3

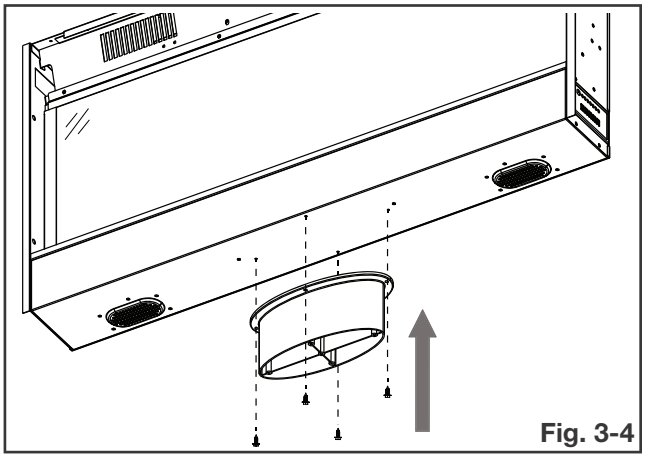

Fig. 3-4

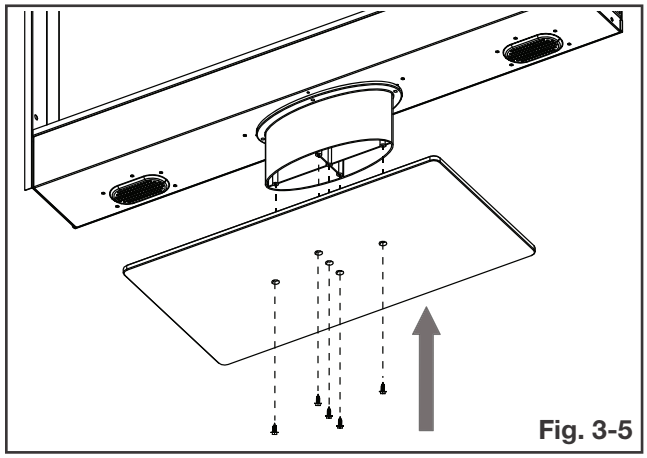

Fig. 3-5

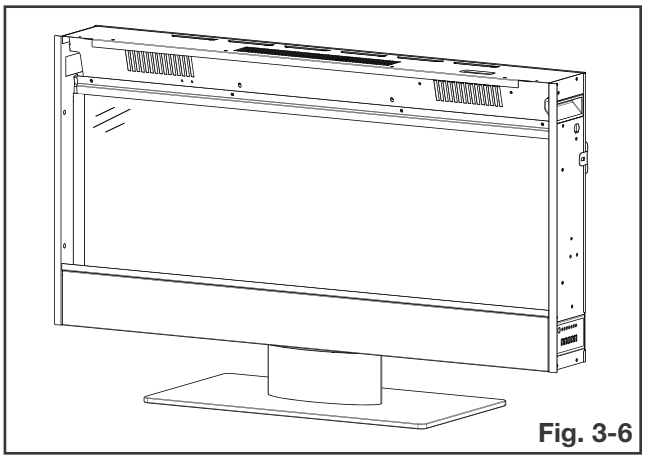

Fig. 3-6

⚠ WARNING

- Power supply service must be completed prior to finishing to avoid reconstruction.
- Heat vents and air openings cannot be covered in any circumstances.

4.1 front surround removal / installation

A. Unplug the LED back lights (see “LED back lights” section).

B. With one hand on the front surround to prevent it from falling, remove the two screws (1 per side) from the top of the appliance **(Fig. 4-1)**. Set the screws aside.

C. Carefully lift the front surround up and away from the appliance **(Fig. 4-2)**. Place it face down on a soft, non-abrasive surface.

D. Reverse these steps to install the front surround.

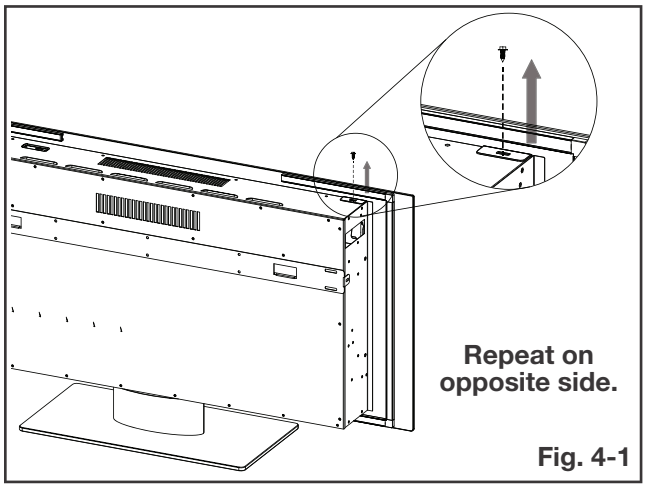

Fig. 4-1

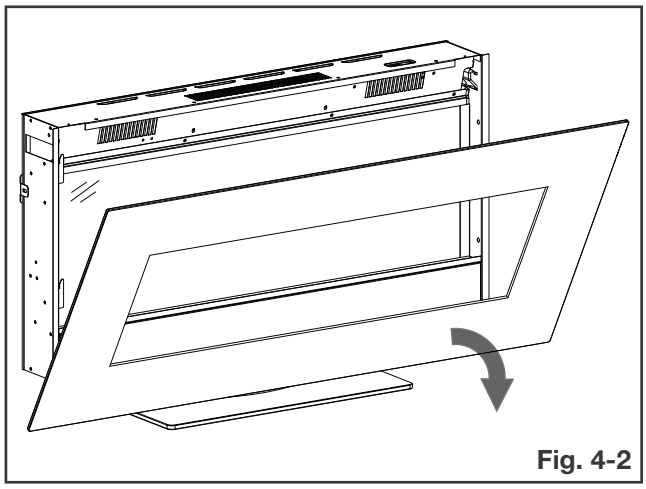

Fig. 4-2

4.2 crystal / pebble media installation

A. Remove the front surround (see “front surround removal / installation” section).

B. **Clean crystal media:** Crystal media may have a fine oil residue that needs to be cleaned prior to installation. Clean the crystal with mild dish soap, drain, rinse thoroughly and dry before placing into the tray.

C. Remove the log set from the media tray (if applicable).

D. Place the media tray onto the front of the appliance opening

E. Carefully place crystals or pebbles into the bottom tray on the front of the appliance as illustrated. Apply an even layer from side to side. Re-secure the glass panel.

finishing

4.3 log installation / removal

A. Remove the front surround (see “front surround removal / installation” section).

B. Remove the log set from inside the appliance. Remove packaging and discard.

C. Place the log set into the appliance **(Fig. 4-3)**.

D. Reinstall the front surround.

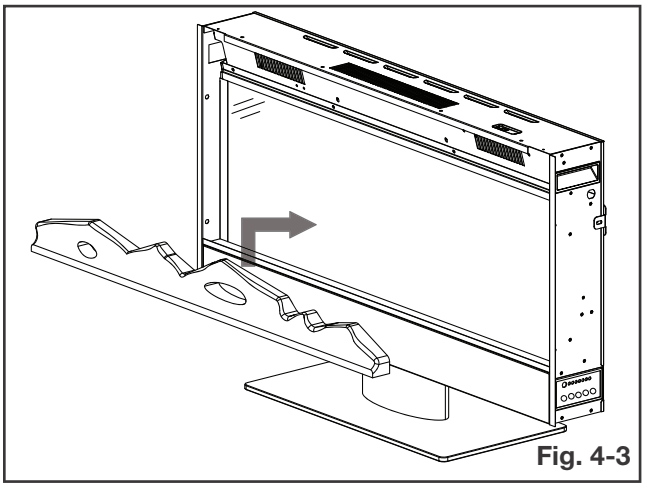

Fig. 4-3

5.0 maintenance

5.1 cleaning

note:

Always turn off the appliance and unplug from the outlet before performing any cleaning or maintenance. Failure to do so could result in electric shock, fire, or personal injury.

A. For metal components, use a soft cloth and dampen with a metal safe cleaning product.
Do not use brass polish or household cleaners that can damage the metal trim.

B. For glass components, use a glass cleaner sprayed onto a cloth. Dry with a lint free cloth.
Do not use abrasive cleaners or any cleaner that can scratch the surface.

C. For vents, use a vacuum with a soft brush or a duster to remove any dust or lint.

D. For plastic components, slightly dampen a cloth with a mild solution of dish soap and warm water.
Do not use abrasive cleaners or any cleaner that can scratch the surface.

6.0 operating instructions

Once the appliance has been plugged into a grounded electrical outlet, it is ready to operate.

6.1 operating control panel and remote control

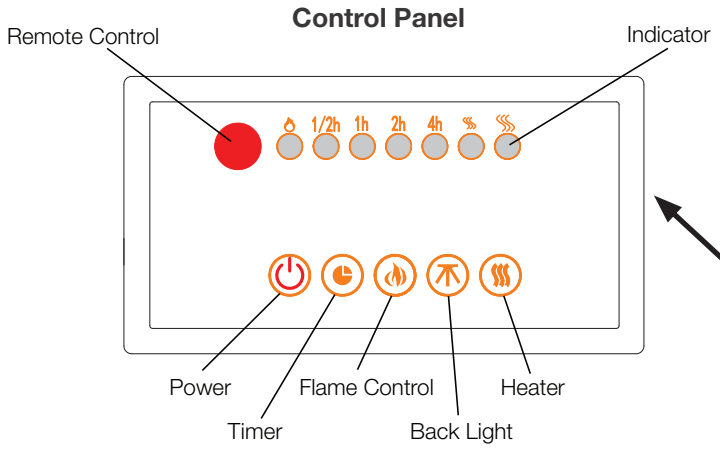

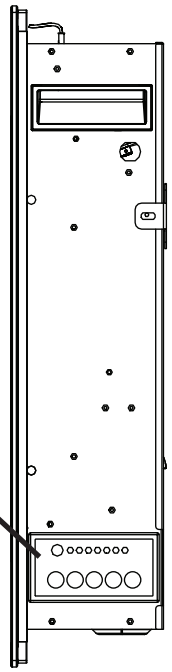

Side View

note:

The timer indicator on the control panel will light up to the corresponding setting. It will have a series of different combinations to show which setting is on. For example, the 3.5h setting will have 1/2, 1, and 2 light on to indicate it is a total of 3.5h.

Power		Turns the appliance on / off.
Timer		Controls the timer. The timer can be programmed to run the appliance for specific lengths of time (30 mins. minimum to 7.5 hrs. maximum).
Flame Control (The flames stay on until power is turned off. Flame must be on for the heater to turn on).		Controls flame height, and makes the flame dimmer or bright.
Heater Control (Flame must be on for the heater to turn on).		Turns the heater and blower on / off. **2 Settings:** Low Heat and High Heat. The heater will blow cool cool for 10 seconds before the heat turns on and after it turns off. This prevents the appliance from overheating.
Back Lights Control		Controls LED back lights. **10 Settings:** Orange, red, blue, yellow, green, purple, azure, carmine, white, pink. **NOTE:** The appliance will auto-cycle through colours after pressing the button 11 times. It will be locked after pressing the button 12 times, and the back lights will be turned off after pressing the button 13 times.

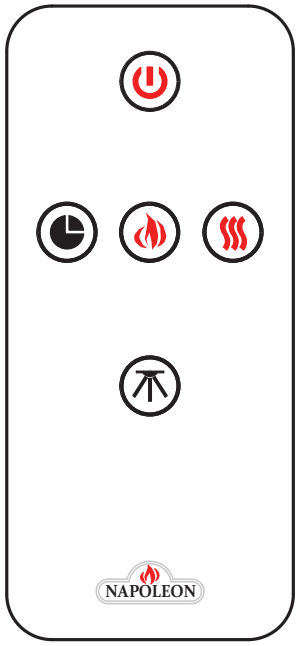

Remote Control

note:

This remote control must remain within 26 feet (8 meters) of the appliance to be effective. This range may be reduced as the battery power is depleted.

6.2 Bluetooth connection

This appliance is equipped with a Bluetooth audio speaker. It does not require an App and will play music on the mobile device as a wireless speaker.

1. Once the appliance is plugged in, use your mobile device to search for the Bluetooth signal called “Napoleon Bluetooth”.
2. Connect with the “Napoleon Bluetooth” signal. You will hear a “BEEP” sound from the appliance if the connection is successful.

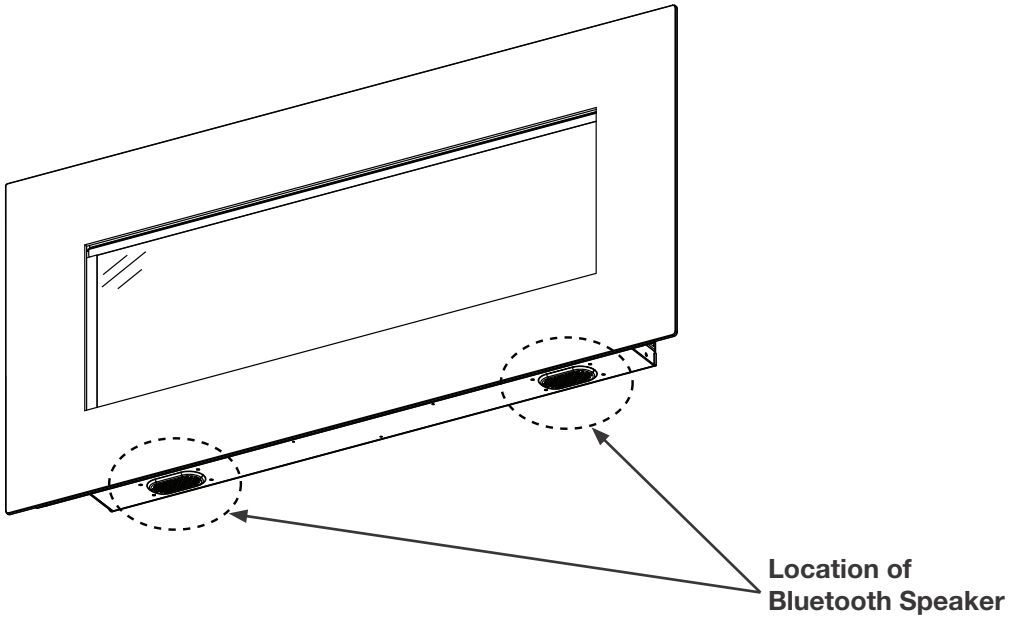

6.3 LED back lights

Before operating appliance, ensure to plug in LED back lights as below.

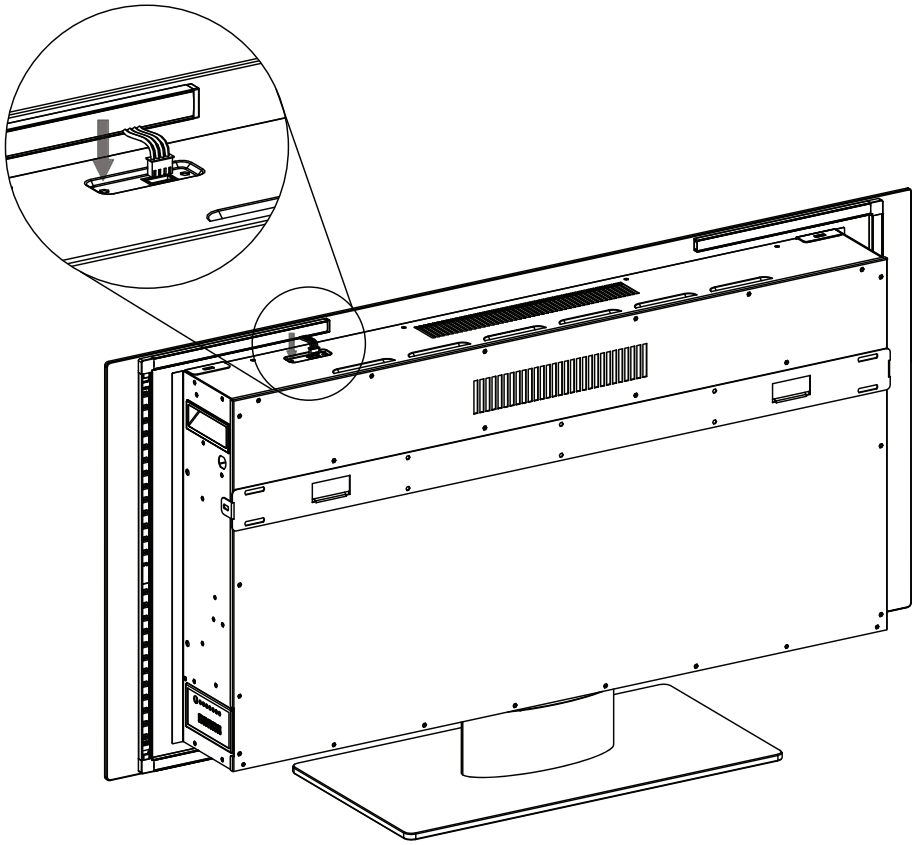

6.4 remote battery installation

WARNING

- This remote control requires button batteries that are hazardous to young children.
- WARNING! KEEP BATTERIES OUT OF REACH OF CHILDREN.
- Swallowing may lead to serious injury or death in as little as 2 hours due to chemical burns and potential perforation of the oesophagus.
- If you suspect your child has swallowed or inserted a button battery, immediately seek urgent medical assistance.
- Examine devices and make sure the battery compartment is correctly secured (i.e. that the screw or other mechanical fastener is tightened). Do not use if compartment is not secure.
- Dispose of used button batteries immediately and safely. Flat batteries can still be dangerous.
- Tell others about the risks associated with button batteries and how to keep their children safe.

note:

The remote control has a removable plastic tab to prolong the battery life while shipping. Remove the tab for the remote control to function.

1. To replace the existing battery, remove the battery holder.
2. To remove the battery holder, turn the remote onto its front side. Slide the battery holder outwards.
3. Replace the existing battery holder with a new battery (type CR 2025). Slide the battery holder back into position.
4. The battery holder is secure onto the remote control when a “CLICKING” noise is heard.

note:

The remote control must remain within 5 meters (17 feet) of the appliance to be effective. This range may be reduced when battery power is depleted. The remote control must be aimed at the centre of the appliance for it to function most effectively.

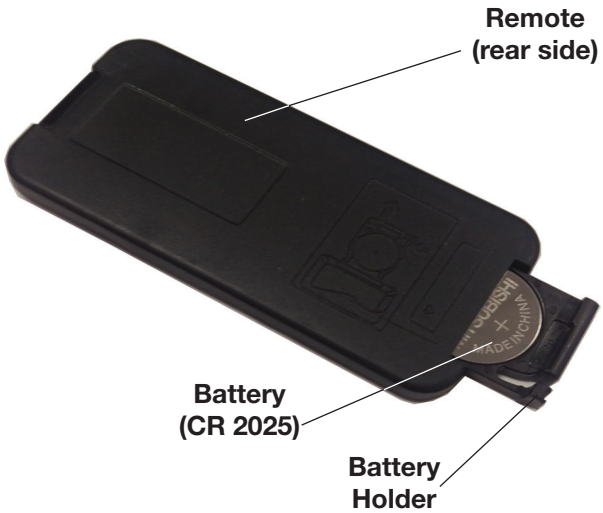

7.0 electrical information

⚠ WARNING

- Turn off the appliance completely and let cool before servicing. Only a qualified service person should service and repair this electrical appliance.

7.1 wiring diagram

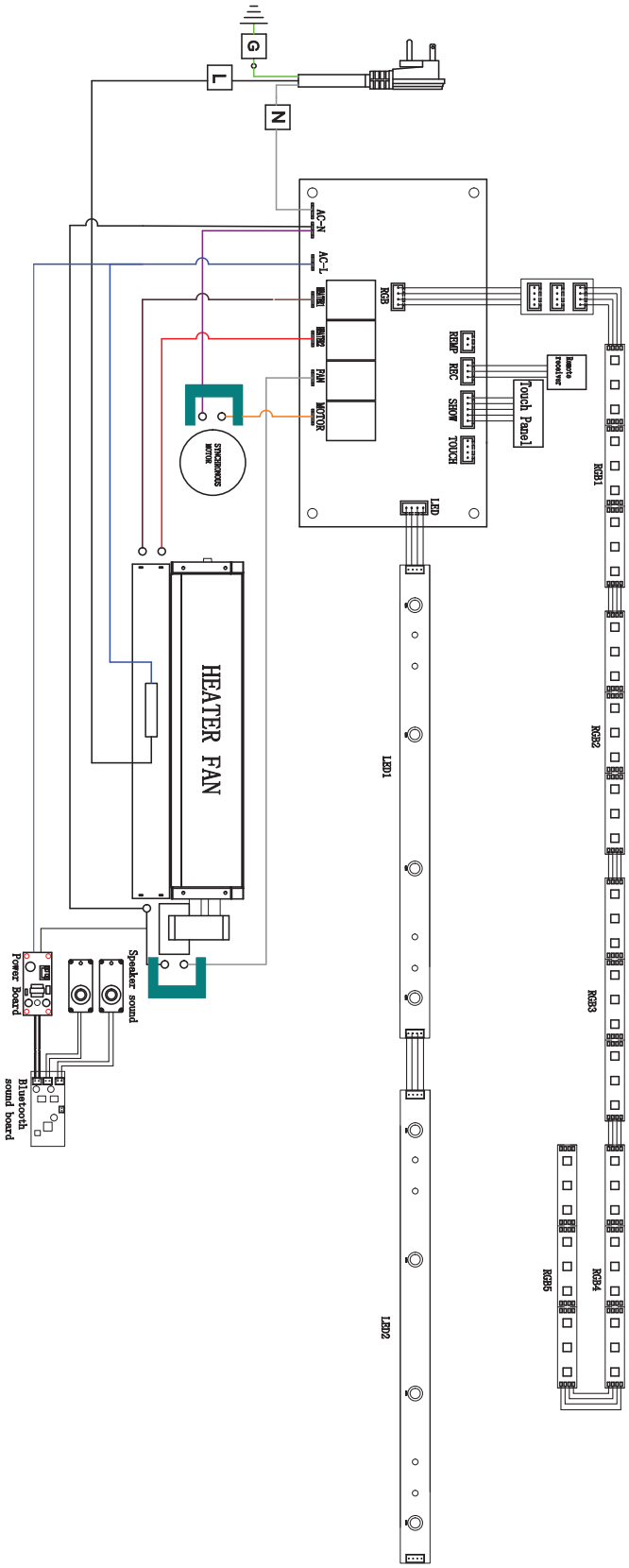

8.0 replacement parts

⚠ WARNING

- Failure to position the parts in accordance with this manual or failure to use only parts specifically approved with this appliance may result in property damage or personal injury.

Contact your dealer for questions concerning prices and policies on replacement parts. Normally, all parts can be ordered through your Authorized dealer / distributor.

For warranty replacement parts, a photocopy of the original invoice will be required to honour the claim.

When ordering replacement parts always give the following information:

- Model & Serial Number of appliance
- Installation date of appliance
- Part number
- Description of part
- Finish

Parts, part numbers, and availability are subject to change without notice.

Parts identified as stocked will be delivered within 2 to 5 business days for most delivery destinations.

Parts not identified as stocked will be delivered within a 2 to 4 week period, for most cases.

Parts identified as 'SO' are special order and can take up to 90 days for delivery.

note:

Care must be taken when removing and disposing of any broken glass or damaged components. Be sure to vacuum up any broken glass from inside the appliance before operation.

8.1 NEFL42B-BT overview

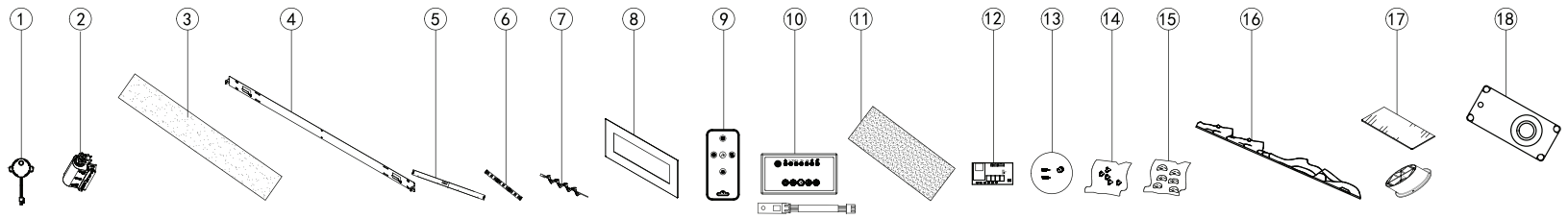

Items may not appear exactly as illustrated.

Ref. No.	Description	Stocked
1	Synchronus motor	
2	Blower and heater assembly	
3	Plastic strip	
4	Wall mounting bracket	
5	LED light strip (orange)	
6	LED back light	
7	Reflector spindle	
8	Front glass	
9	Remote control	

Ref. No.	Description	Stocked
10	Control panel (with remote receiver)	
11	Acrylic plastic panel	
12	Circuit board	
13	Hardware kit	
14	Crystal	
15	Pebbles	
16	Log set	
17	Glass stand	
18	Bluetooth speaker	

⚠ WARNING

- Turn off the appliance completely and let cool before servicing. Only a qualified service person should service and repair this electric appliance.

symptom	problem	solution
Appliance will not come on when power button/ switch is put into the “on” position.	Appliance is not plugged into an electrical outlet.	Check plug, and plug in the appliance if necessary.
	Hard wire connections are not correct (if applicable).	See “hard-wiring installation” section.
	Appliance has overheated and safety thermal switch has tripped.	Unlug power or turn off the circuit breaker, allow appliance to cool for 15 minutes, then plug in the appliance or turn the breaker on.
	Main PCB board issue.	Inspect the circuit board and replace, if necessary.
Appliance turns off and will not turn on.	House circuit breaker has tripped.	Reset house circuit breaker.
	Appliance’s fuse has blown.	Replace the fuse.
	Appliance has overheated and safety thermal switch has tripped.	Unplug power or turn off the circuit breaker, allow appliance to cool for 15 minutes to reset the thermal switch, then plug in the appliance or turn the breaker on.
Appliance has returned to default settings.	Power failure.	Re-program appliance to original settings (not applicable with all appliances).
Remote control does not work.	Low/dead batteries.	Replace batteries in remote control.
	Remote receiver malfunction.	Ensure remote receiver is not blocked. Replace control panel.
No warm air coming out of the appliance.	Heater setting not selected.	See “operation” section.
	Heater has been locked out.	See “operation” section.
	Room temperature is higher than appliance setting (if set to room temperature).	Reset temperature setting.
	Appliance has overheated and safety thermal switch has tripped.	Unplug power or turn off the circuit breaker. Allow for appliance to cool for 15 minutes.
	Hard wire connections are not correct (if applicable).	See “hard-wiring installation” section.
	Heater issue.	Inspect the blower and heater and replace, if necessary.
Heater shuts off automatically.	Room is too warm.	The heater has a built-in thermostat so it will shut off automatically once the pre-set temperature is reached. It will also turn on automatically if the room temperature drops below the pre-set temperature.
Dim or no flame.	Flame brightness not selected.	See “operation” section.
	Flame LEDs issue.	Inspect the LED and replace, if necessary.
	Main PCB board issue.	Inspect the main PCB board and replace, if necessary.
Flame does not move.	Motor is stalled/malfunctioning.	Cycle on/off. If problem persists, consult dealer.

troubleshooting

symptom	problem	solution
Ember bed is not glowing or dimming.	Brightness not selected.	See “operation” section.
	Ember LED issue.	Inspect the ember bed LEDs and replace, if necessary.
	Main PCB board issue.	Inspect the main PCB board and replace, if necessary.
LED flashing “OH”.	Appliance has overheated and safety thermal switch has tripped.	Unplug power or turn off the circuit breaker. Allow appliance to cool for 15 minutes, then plug in the appliance or turn the breaker on. If problem persists, consults your dealer.

FCC Warning

This device complies with part 15 of the FCC Rules. Operation is subject to the following two conditions: (1) This device may not cause harmful interference, and (2) this device must accept any interference received, including interference that may cause undesired operation.

Any Changes or modifications not expressly approved by the party responsible for compliance could void the user's authority to operate the equipment.

Note: This equipment has been tested and found to comply with the limits for a Class B digital device, pursuant to part 15 of the FCC Rules. These limits are designed to provide reasonable protection against harmful interference in a residential installation. This equipment generates uses and can radiate radio frequency energy and, if not installed and used in accordance with the instructions, may cause harmful interference to radio communications. However, there is no guarantee that interference will not occur in a particular installation. If this equipment does cause harmful interference to radio or television reception, which can be determined by turning the equipment off and on, the user is encouraged to try to correct the interference by one or more of the following measures:

-Reorient or relocate the receiving antenna.

-Increase the separation between the equipment and receiver.

-Connect the equipment into an outlet on a circuit different from that to which the receiver is connected.

-Consult the dealer or an experienced radio/TV technician for help.

RF warning:

This equipment complies with FCC radiation exposure limits set forth for an uncontrolled environment. This equipment should be installed and operated with minimum distance 20cm between the radiator & your body.

IC Warning

This device contains licence-exempt transmitter(s)/receiver(s) that comply with Innovation, Science and Economic Development Canada's licence-exempt RSS(s). Operation is subject to the following two conditions:

(1) This device may not cause interference.

(2) This device must accept any interference, including interference that may cause undesired operation of the device.

Cet appareil contient des émetteurs / récepteurs exemptés de licence conformes aux RSS (RSS) d'Innovation, Sciences et Développement économique Canada. Le fonctionnement est soumis aux deux conditions suivantes :

(1) Cet appareil ne doit pas causer d'interférences.

(2) Cet appareil doit accepter toutes les interférences, y compris celles susceptibles de provoquer un fonctionnement indésirable de l'appareil.

This equipment complies with IC radiation exposure limits set forth for an uncontrolled environment. This equipment should be installed and operated with minimum distance 20cm between the radiator & your body.

Cet équipement doit être mis en place avec des émissions de rayonnement émetteur pour un environnement naturel. Ce matériel doit être installé et se faire avec une distance minimale de 20cm entre les radiateurs et les autresYour body shop.