94140-RX SCHEMATIC FOR MODEL NO.94140-49.860MHz

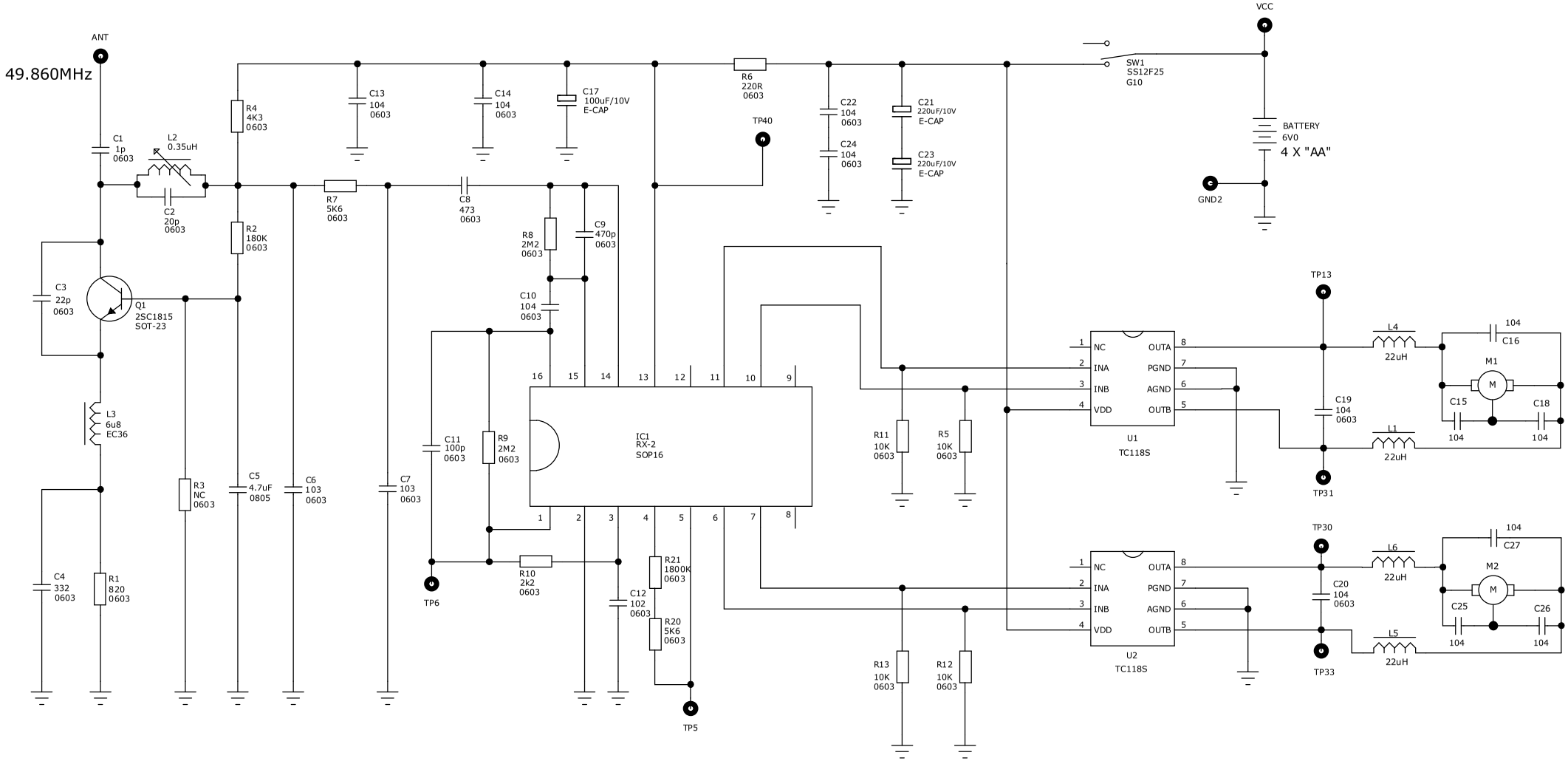

COMPANY: TOY STATE INDUSTRIAL LTD	
MODEL: 94140-RX-49MHz	
VER: 1.0	
DRAWN BY: Chen	DATE: 2015-4-24
CHECK BY: Xiao	DATE: 2015-4-24
APP. BY: Xiao	DATE: 2015-4-24