RX SCHEMATIC FOR MODEL NO. 60321 - 49MHz

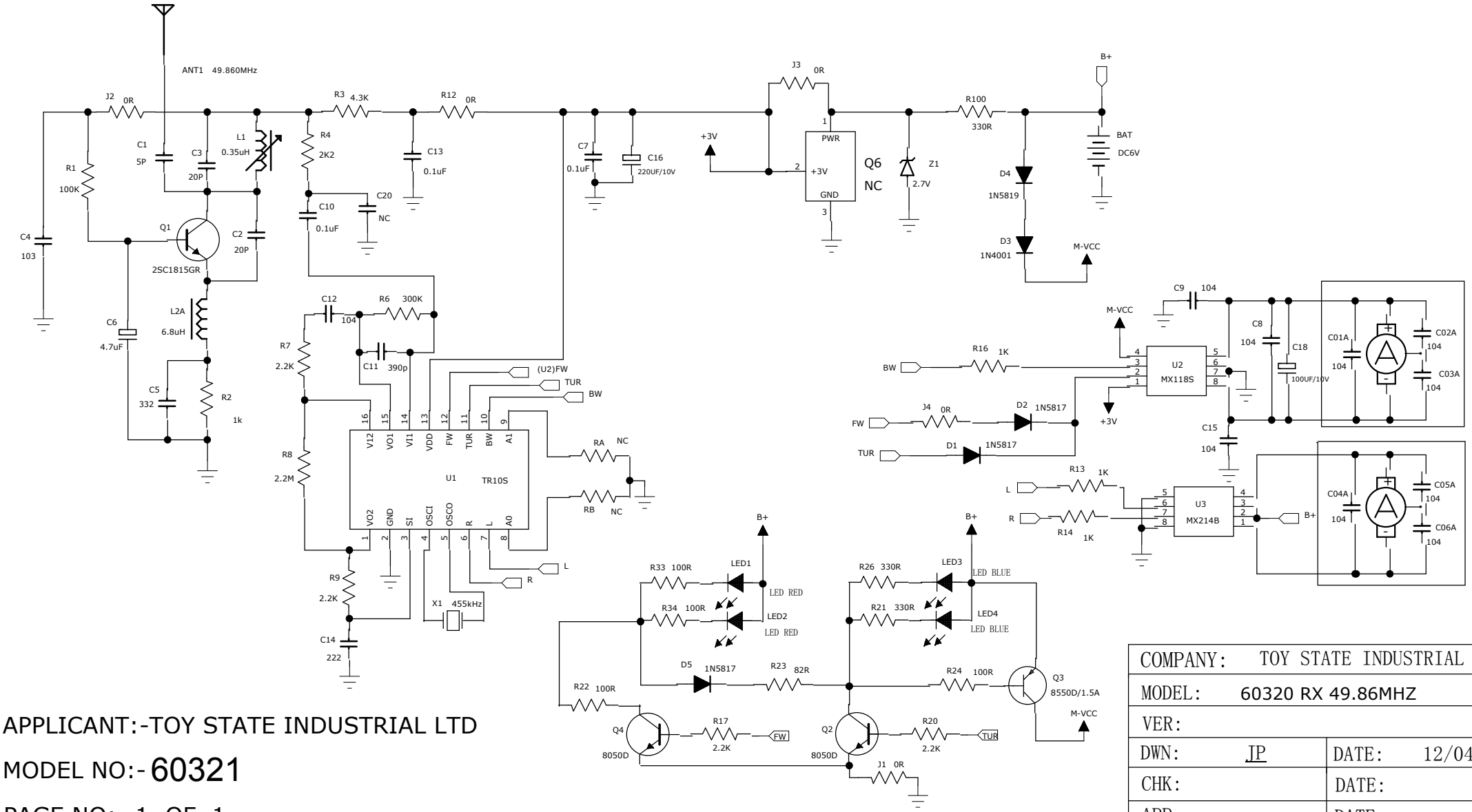

APPLICANT:-TOY STATE INDUSTRIAL LTD

MODEL NO:- 60321

PAGE NO:- 1 OF 1

COMPANY:	TOY STATE INDUSTRIAL LTD		
MODEL:	60320 RX 49.86MHZ		
VER:			
DWN:	JP	DATE:	12/04/25
CHK:		DATE:	
APP. :		DATE:	