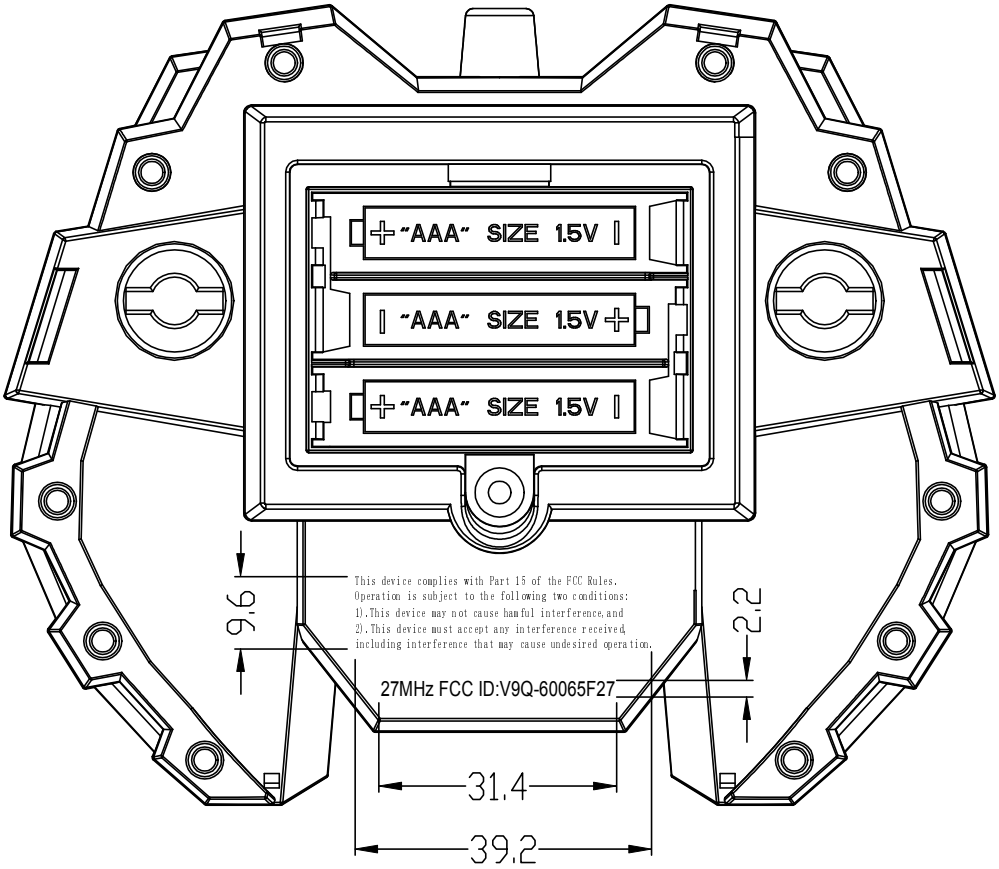
"AAA" SIZE 1.5V
"AAA" SIZE 1.5V
"AAA" SIZE 1.5V
This device complies with Part 15 of the FCC Rules.
Operation is subject to the following two conditions:
1).This device may not cause hamful interference,and
2).This device must accept any interference received,
including interference that may cause undesired operation.
27MHz FCC ID:V9Q-60065F27
9.6
2.2
31.4
39.2

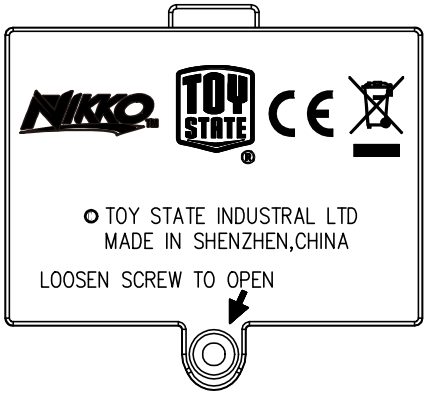
NIKKO
TOY STATE
TOY STATE INDUSTRAL LTD
MADE IN SHENZHEN,CHINA
LOOSEN SCREW TO OPEN