13G0020 TX 27.145MHz-A/B/C SCHEMATIC

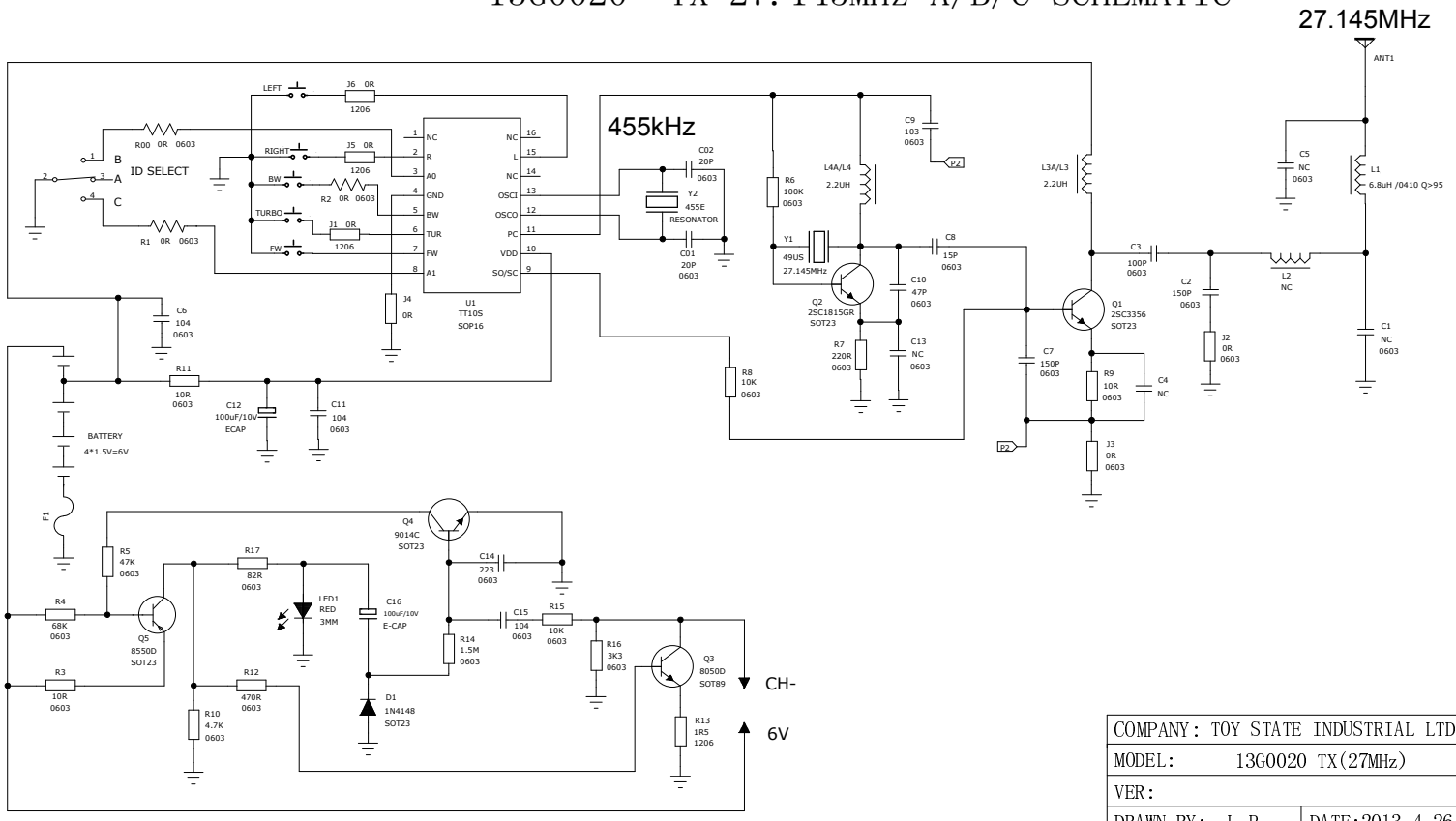

COMPANY: TOY STATE INDUSTRIAL LTD	
MODEL: 13G0020 TX(27MHz)	
VER:	
DRAWN BY: L.P	DATE:2013-4-26
CHECK BY:	DATE:
APP. BY:	DATE: