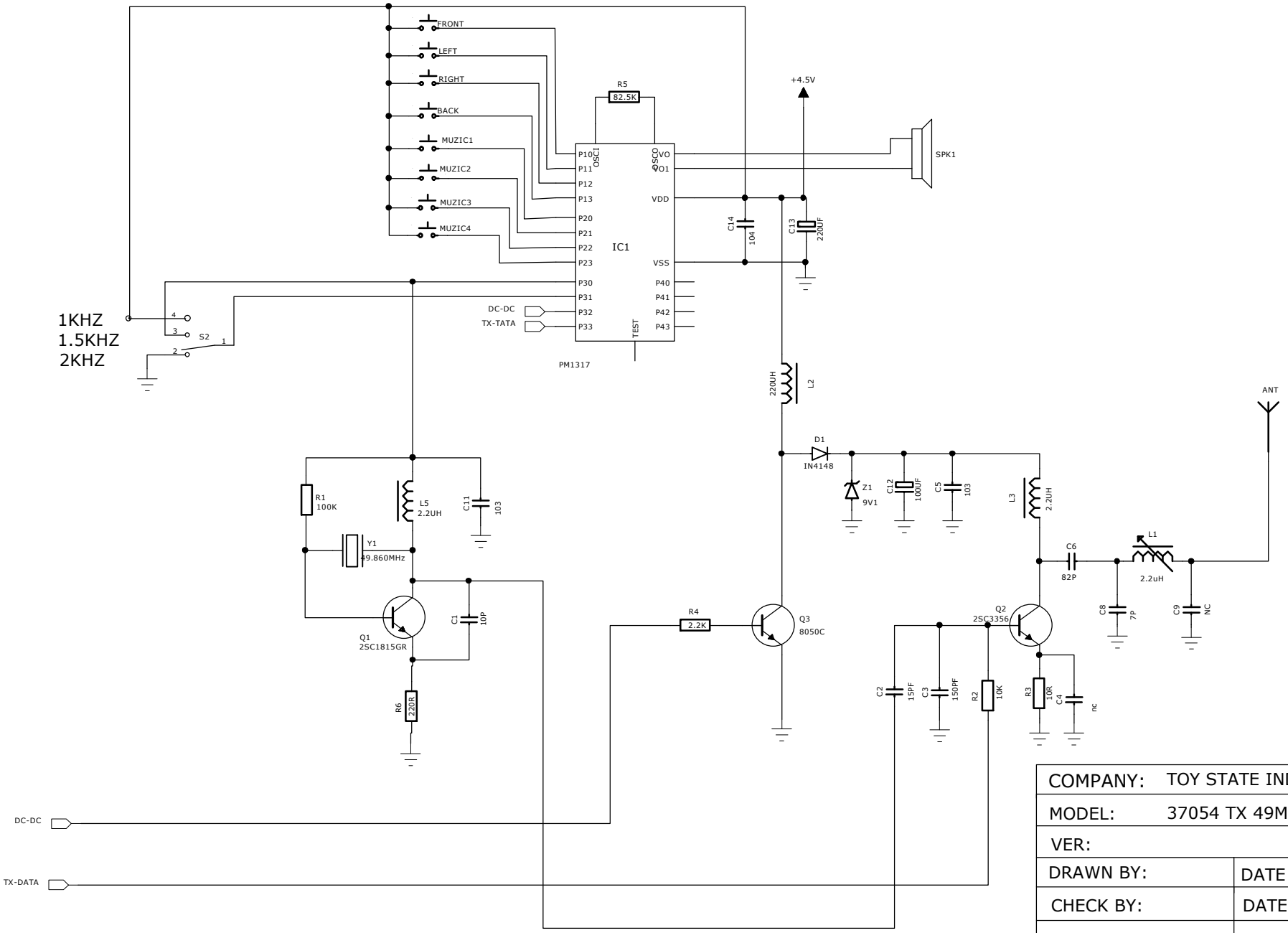

COMPANY:	TOY STATE INDUSTRIAL LTD
MODEL:	37054 TX 49MHZ
VER:	
DRAWN BY:	DATE: 2010/03/20
CHECK BY:	DATE:
APP. BY:	DATE: