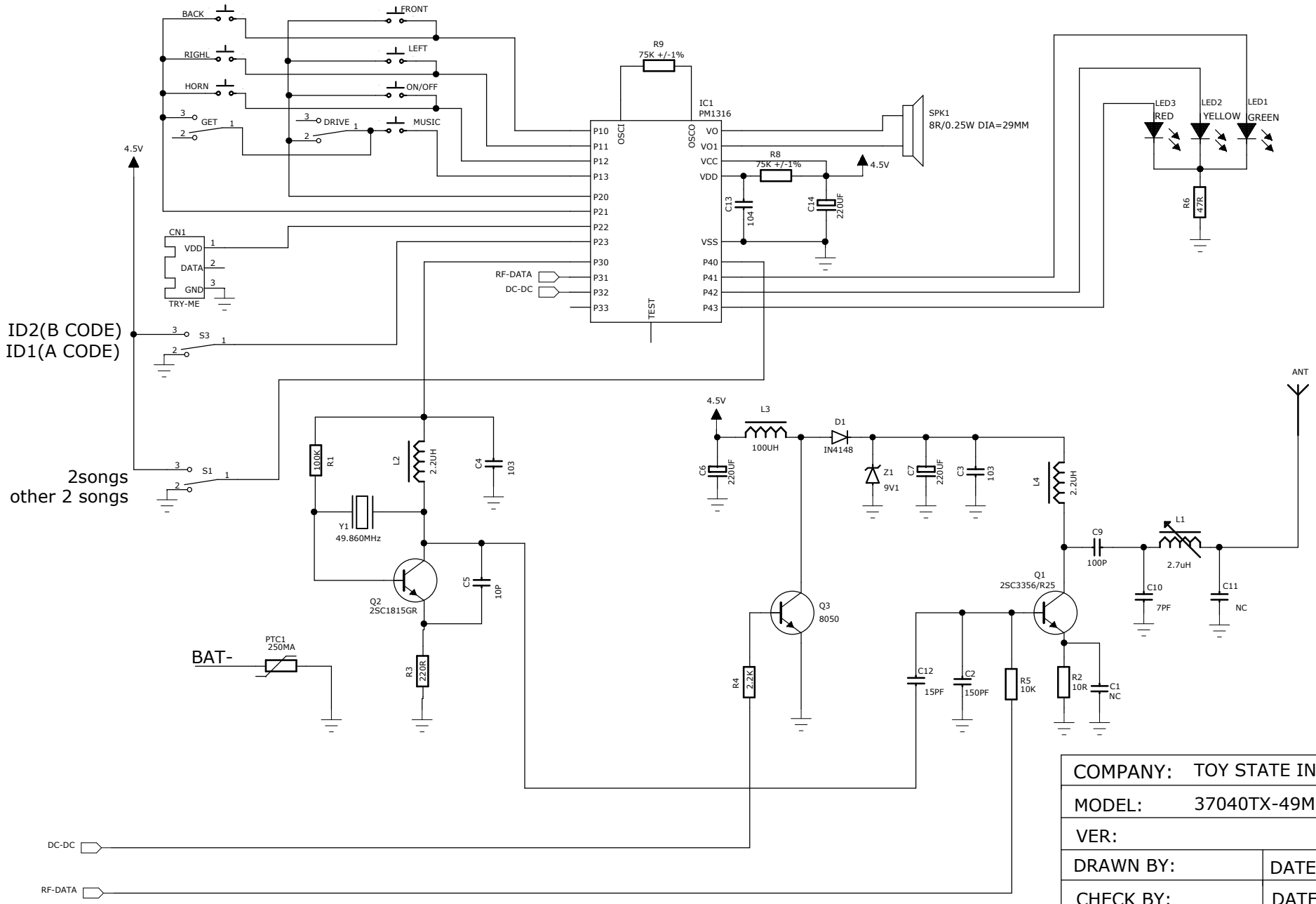

COMPANY:	TOY STATE INDUSTRIAL LTD
MODEL:	37040TX-49M(TRY-ME)
VER:	
DRAWN BY:	DATE: 2011/04/09
CHECK BY:	DATE:
APP. BY:	DATE: