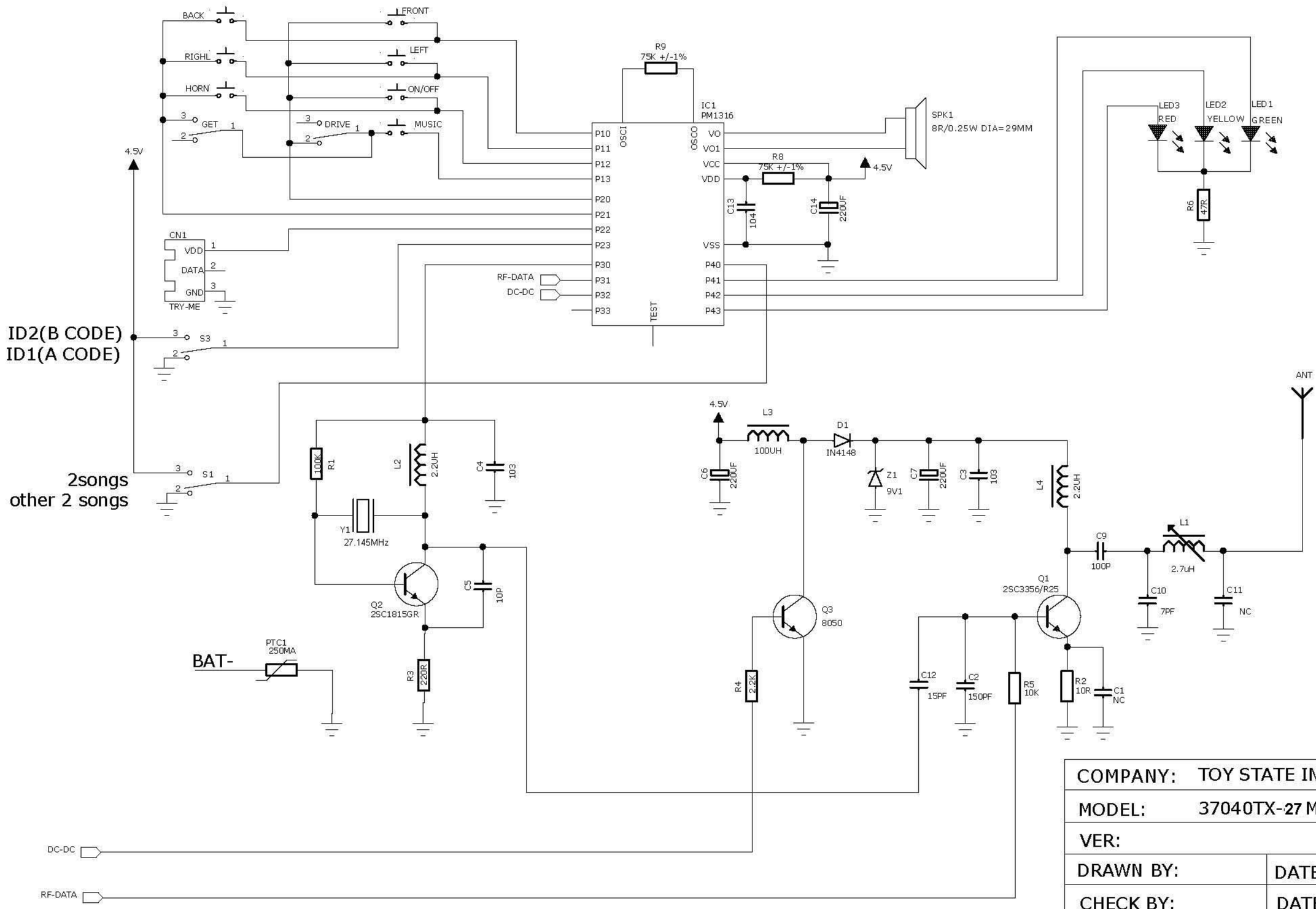


| | |
|---|---|
| COMPANY: | TOY STATE INDUSTRIAL LTD |
| MODEL: | 37040TX-27 M(TRY-ME) |
| VER: | |
| DRAWN BY: | DATE: 2011/04/09 |
| CHECK BY: | DATE: |
| APP. BY: | DATE: |