MODEL NO: 37020TX
TX Circuit Diagram
PAGE NO:1 OF 1
APPLICANT: TOY STATE INDUSTRIAL LTD

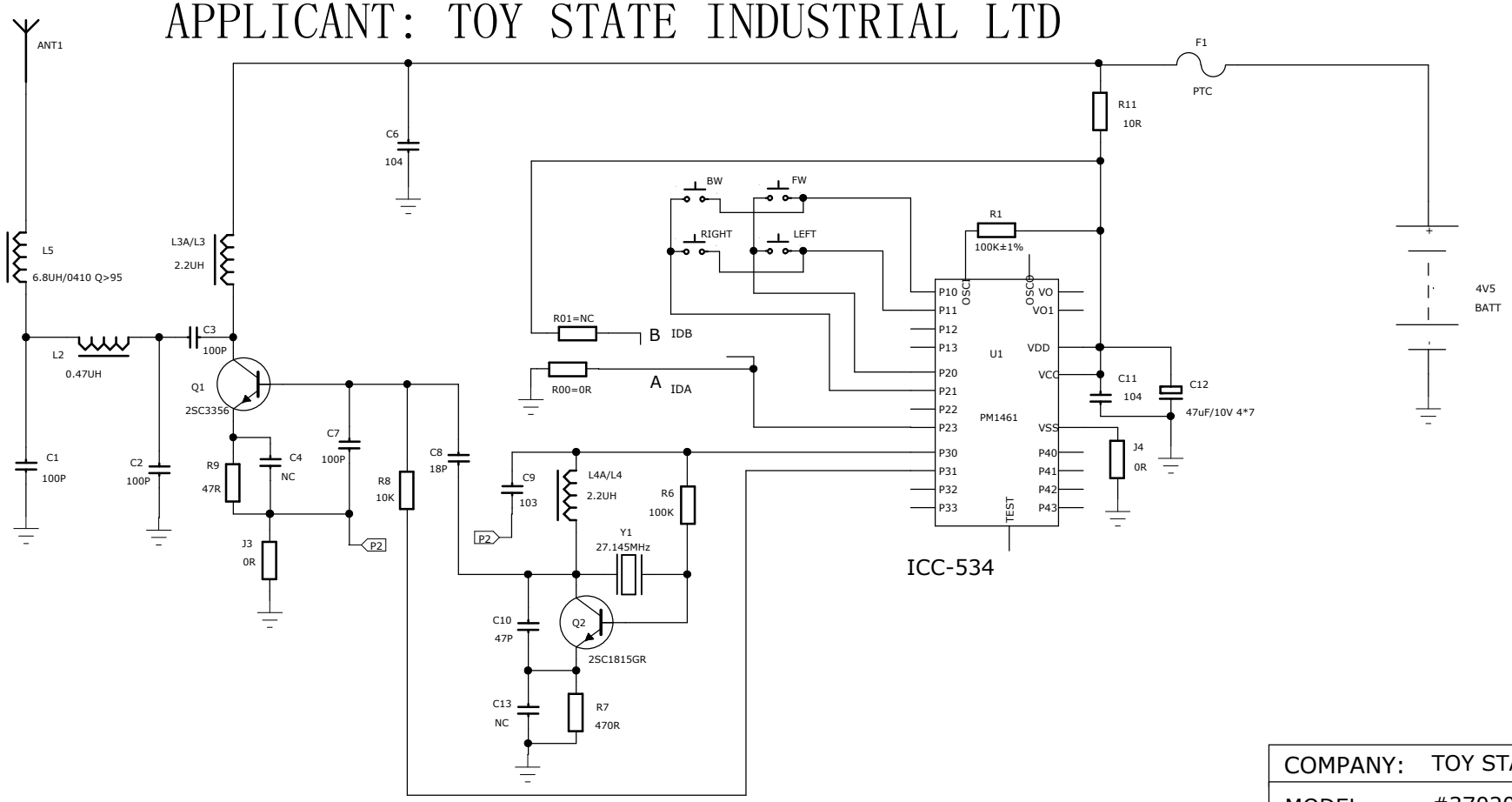

COMPANY:	TOY STATE INDUSTRIAL LTD
MODEL:	#37020 TX Circuit Diagram
VER:00	
DWN. YHYANG	DATE: 2013-5-15
CHK.	DATE:
APP.	DATE: