35721/2 TX 原理图

表号28-F-004　　版本A/0

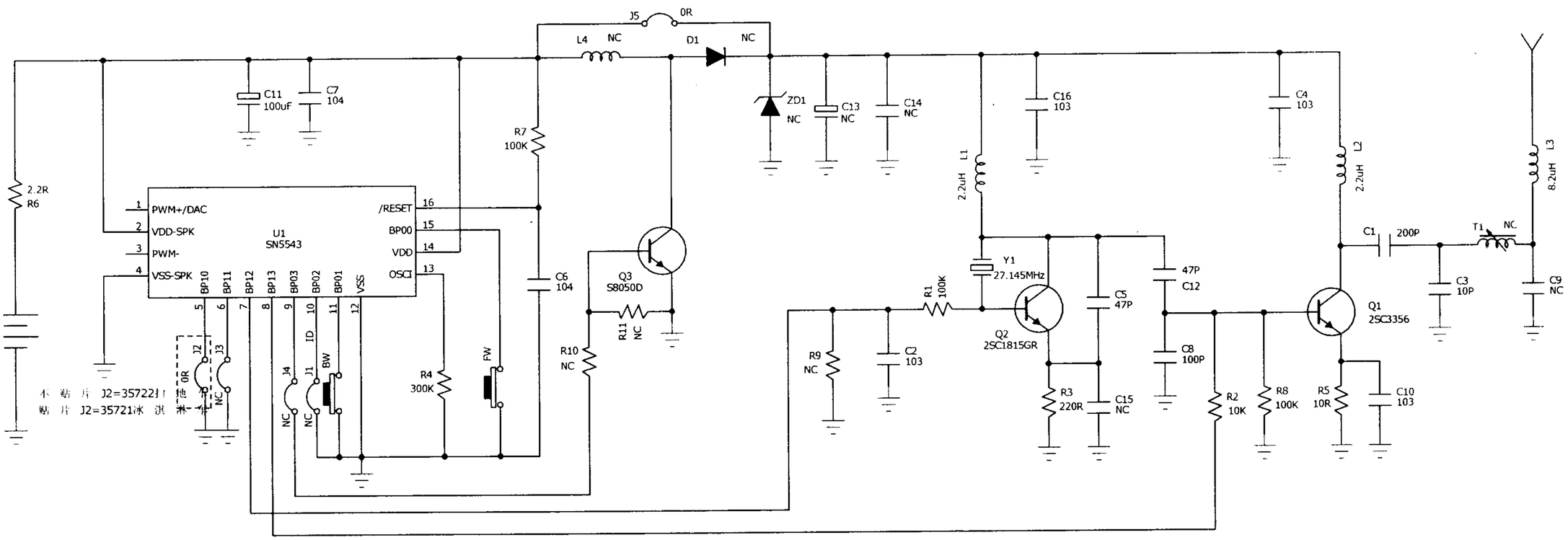

Cali:when power on bp00bp03 connect to VSS,bp10 generate 1khz.

COMPANY: TOY STATE INDUSTRIAL LTD	
MODEL: 35721-35722TX 27MHZ SCH	
VER: 1.0	
DWN. ZHOU	DATE: 2012-JUN-11
CHK.	DATE:
APP.	DATE: