RADIATED SPURIOUS EMISSIONS PORTIONS OF

FCC CFR47 PART 22 SUBPART H
FCC CFR47 PART 24 SUBPART E

CERTIFICATION TEST REPORT
FOR

TRI BAND 1xRTT CDMA PHONE WITH BLUETOOTH

MODEL NUMBER: E4233

FCC ID: V65E4233

REPORT NUMBER: 11U14121-3, Revision A

ISSUE DATE: JANUARY 3. 2012

Prepared for

KYOCERA COMMUNICATIONS, INC.
9520 TOWNE CENTER DRIVE
SAN DIEGO, CA 92121, USA

Prepared by

COMPLIANCE CERTIFICATION SERVICES (UL CCS)
47173 BENICIA STREET
FREMONT, CA 94538, U.S.A.
TEL: (510) 771-1000
FAX: (510) 661-0888

NVLAP LAB CODE 200065-0

Revision History

Rev.	Issue Date	Revisions	Revised By
---	11/11/11	Initial Issue	T. Chan
A	01/03/12	Revised EUT description to remove all instances of: Military Specs	A. Zaffar

COMPLIANCE CERTIFICATION SERVICES (UL CCS) FORM NO: CCSUP4031B
47173 BENICIA STREET, FREMONT, CA 94538, USA TEL: (510) 771-1000 FAX: (510) 661-0888

TABLE OF CONTENTS

1. ATTESTATION OF TEST RESULTS 4

2. TEST METHODOLOGY 5

3. FACILITIES AND ACCREDITATION 5

4. CALIBRATION AND UNCERTAINTY 5

4.1. MEASURING INSTRUMENT CALIBRATION 5

4.2. SAMPLE CALCULATION 5

4.3. MEASUREMENT UNCERTAINTY 5

5. EQUIPMENT UNDER TEST 6

5.1. DESCRIPTION OF EUT 6

5.2. MAXIMUM OUTPUT POWER 6

5.3. SOFTWARE AND FIRMWARE 6

5.4. WORST-CASE CONFIGURATION AND MODE 6

5.5. DESCRIPTION OF TEST SETUP 8

6. TEST AND MEASUREMENT EQUIPMENT 10

7. LIMITS AND RESULTS 11

7.1. RADIATED OUTPUT POWER 11

7.2. FIELD STRENGTH OF SPURIOUS RADIATION 14

8. SETUP PHOTOS 17

COMPLIANCE CERTIFICATION SERVICES (UL CCS) FORM NO: CCSUP4031B
47173 BENICIA STREET, FREMONT, CA 94538, USA TEL: (510) 771-1000 FAX: (510) 661-0888

1. ATTESTATION OF TEST RESULTS

COMPANY NAME: KYOCERA COMMUNICATIONS, INC.
9520 TOWNE CENTER DRIVE
SAN DIEGO, CA 92121, USA

EUT DESCRIPTION: TRI BAND 1xRTT CDMA PHONE WITH BLUETOOTH

MODEL: E4233

SERIAL NUMBER: 268435457816724579

DATE TESTED: OCTOBER 28 AND NOVEMBER 3, 2011

APPLICABLE STANDARDS	
STANDARD	**TEST RESULTS**
FCC PART 22H AND 24E	PASS (Radiated Portion)

Compliance Certification Services, Inc. (UL CCS) tested the above equipment in accordance with the requirements set forth in the above standards. All indications of Pass/Fail in this report are opinions expressed by UL CCS based on interpretations and/or observations of test results. Measurement Uncertainties were not taken into account and are published for informational purposes only. The test results show that the equipment tested is capable of demonstrating compliance with the requirements as documented in this report.

Note: The results documented in this report apply only to the tested sample, under the conditions and modes of operation as described herein. This document may not be altered or revised in any way unless done so by UL CCS and all revisions are duly noted in the revisions section. Any alteration of this document not carried out by UL CCS will constitute fraud and shall nullify the document. No part of this report may be used to claim product certification, approval, or endorsement by NVLAP, NIST, or any government agency.

Approved & Released For UL CCS By:

THU CHAN
ENGINEERING MANAGER
UL CCS

Tested By:

MENGISTU MEKURIA
EMC ENGINEER
UL CCS

2. TEST METHODOLOGY

The tests documented in this report were performed in accordance with TIA-603-C, FCC CFR 47 Part 2, FCC CFR 47 Part 22, and FCC CFR Part 24.

3. FACILITIES AND ACCREDITATION

The test sites and measurement facilities used to collect data are located at 47173 Benicia Street, Fremont, California, USA.

UL CCS is accredited by NVLAP, Laboratory Code 200065-0. The full scope of accreditation can be viewed at http://www.ccsemc.com.

4. CALIBRATION AND UNCERTAINTY

4.1. MEASURING INSTRUMENT CALIBRATION

The measuring equipment utilized to perform the tests documented in this report has been calibrated in accordance with the manufacturer's recommendations, and is traceable to recognized national standards.

4.2. SAMPLE CALCULATION

Where relevant, the following sample calculation is provided:

Field Strength (dBuV/m) = Measured Voltage (dBuV) + Antenna Factor (dB/m) + Cable Loss (dB) – Preamp Gain (dB)

36.5 dBuV + 18.7 dB/m + 0.6 dB – 26.9 dB = 28.9 dBuV/m

4.3. MEASUREMENT UNCERTAINTY

Where relevant, the following measurement uncertainty levels have been estimated for tests performed on the apparatus:

PARAMETER	UNCERTAINTY
Conducted Disturbance, 0.15 to 30 MHz	3.52 dB
Radiated Disturbance, 30 to 1000 MHz	4.94 dB

Uncertainty figures are valid to a confidence level of 95%.

COMPLIANCE CERTIFICATION SERVICES (UL CCS) FORM NO: CCSUP4031B
47173 BENICIA STREET, FREMONT, CA 94538, USA TEL: (510) 771-1000 FAX: (510) 661-0888

5. EQUIPMENT UNDER TEST

5.1. DESCRIPTION OF EUT

The EUT is Bluetooth Tri-band CDMA Phone that manufactured by Kyocera Corporations.

5.2. MAXIMUM OUTPUT POWER

The transmitter maximum peak ERP and average EIRP output powers are as follows:

824 to 849 MHz Authorized Band

Frequency Range (MHz)	Modulation	ERP Output Power (dBm)	ERP Output Power (mW)
Low CH - 824.70	CDMA2000	31.63	1455.5
Mid CH - 836.52		29.55	901.6
High CH - 848.31		28.52	711.2

1850 to 1910 MHz Authorized Band

Frequency Range (MHz)	Modulation	EIRP Output Power (dBm)	EIRP Output Power (mW)
Low CH - 1851.25	CDMA2000	25.26	335.7
Mid CH - 1880.00		25.94	392.6
High CH - 1908.75		25.98	396.3

5.3. SOFTWARE AND FIRMWARE

The EUT is linked with Agilent Communication Test Set.

5.4. WORST-CASE CONFIGURATION AND MODE

The worst-position was the EUT with highest emissions. To determine the worst-case, the EUT was investigated on X, Y, and Z Positions, and the worst position among X, Y, and Z with an AC Adapter and headset. After the investigations the worst-cases were turned out to be Z position with headset only and Z position with an AC/DC adapter only for both cell and PCS bands respectively.

COMPLIANCE CERTIFICATION SERVICES (UL CCS) FORM NO: CCSUP4031B
47173 BENICIA STREET, FREMONT, CA 94538, USA TEL: (510) 771-1000 FAX: (510) 661-0888

PROCEDURE USED TO ESTABLISH TEST SIGNAL

3G-CDMA2000 1xRTT

This procedure assumes the Agilent 8960 Test Set has the following applications installed and with valid license.

Application	Rev, License
CDMA2000 Mobil Test	B.10.11, L

1xRTT

- Call Setup > Shift & Preset
- Protocol Rev > 6 (IS-2000-0)
- Radio Config (RC) > RC3 (Fwd3, Rvs3)
- FCH Service Option (SO) Setup > 55
- Traffic Data Rate > Full
- TDSO SCH Info > F-SCH Parameters > F-SCH Data Rate > 153.6 kbps
  > R-SCH Parameters > R-SCH Data Rate > 153.6 kbps
- Cell Info > Cell Parameters > System ID (SID) > 2
  > Network ID (NID) > 65535

Once “Active Cell” show “Connected ” then change “Rvs Power Ctrl” from “Active bits” to “**All Up bits**” to get the maximum power.

Worst-case Measurement Result @ Low, Middle and High Channel

Worst-case Measurement Result for Low, Middle and High Channel under Radio Configuration RC3 and Service Option 55.

5.5. DESCRIPTION OF TEST SETUP

SUPPORT EQUIPMENT

PERIPHERAL SUPPORT EQUIPMENT LIST				
Description	Manufacturer	Model	Serial Number	FCC ID
AC Adapter (EUT)	Kyocera	SCP-31ADT	02041	DoC
Headset	Kyocera	N/A	02051	DoC

I/O CABLES

I/O CABLE LIST						
Cable No.	Port	# of Identical Ports	Connector Type	Cable Type	Cable Length	Remarks
1	DC Input	1	Micro-USB	Un-Shielded	1.5 m	NA
2	Audio	1	3.5 mm Audio Jack	Un-Shielded	1 m	NA

TEST SETUP

The EUT is a CDMA phone and-is tested as a standalone configuration. Communications Test Set is used to link the device under test.

COMPLIANCE CERTIFICATION SERVICES (UL CCS) FORM NO: CCSUP4031B
47173 BENICIA STREET, FREMONT, CA 94538, USA TEL: (510) 771-1000 FAX: (510) 661-0888

SETUP DIAGRAM FOR TESTS

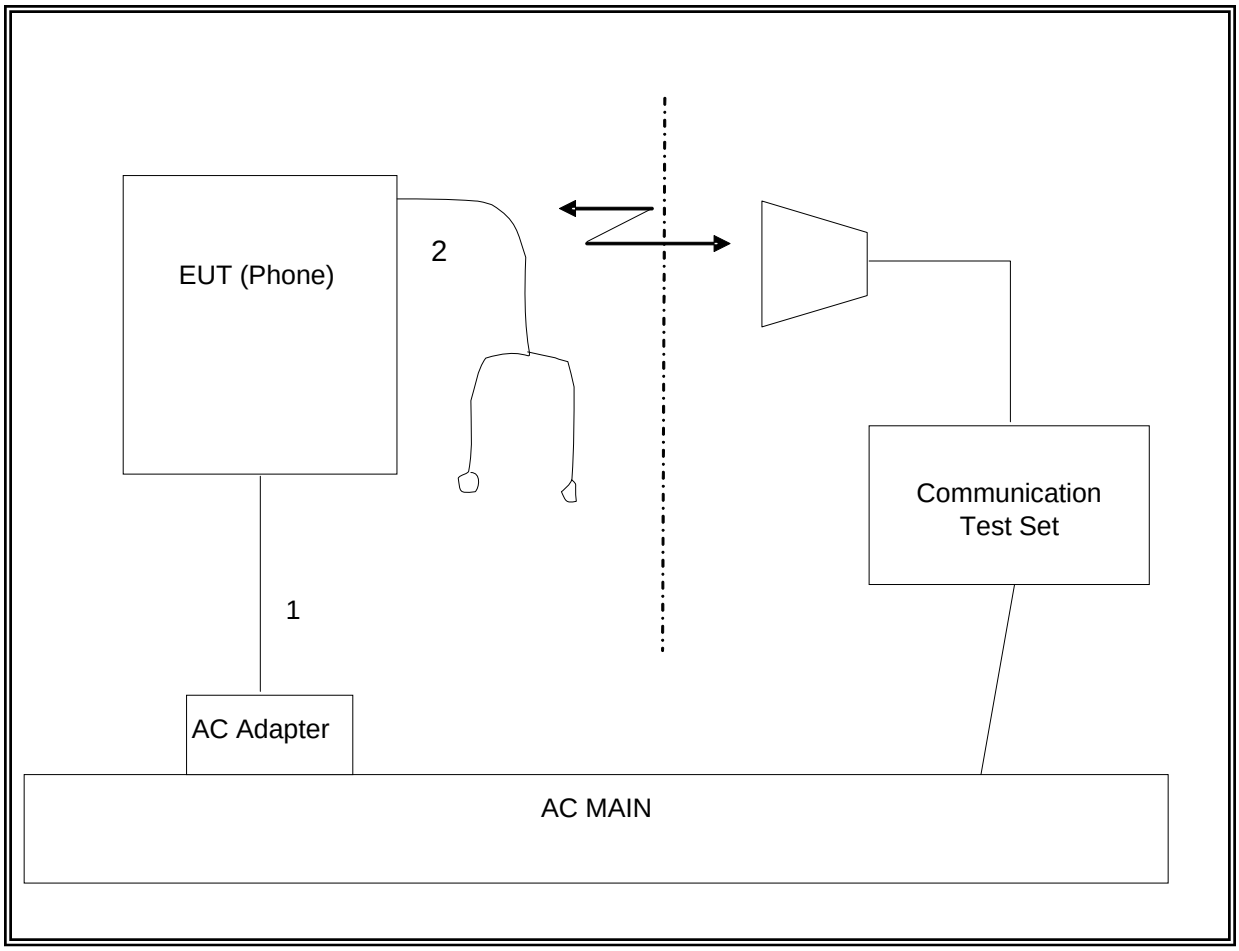

6. TEST AND MEASUREMENT EQUIPMENT

The following test and measurement equipment was utilized for the tests documented in this report:

TEST EQUIPMENT LIST				
Description	**Manufacturer**	**Model**	**Asset**	**Cal Due**
Spectrum Analyzer, 26.5 GHz	Agilent / HP	E4440A	C01179	01/19/12
Communications Test Set	Agilent / HP	E5515C	C01086	07/17/12
Antenna, Horn, 18 GHz	EMCO	3115	C00943	CNR
Antenna, Horn, 18 GHz	EMCO	3115	C00945	6/10/2012
Antenna, Bilog, 2 GHz	Sunol Sciences	JB1	C01011	07/16/12
Preamplifier, 26.5 GHz	Agilent / HP	8449B	C01052	07/12/12
Dipole	Speag	D900V2	N/A	11/16/11
Highpass Filter, 1.5 GHz	Micro-Tronics	HPM13193	N02689	CNR
Highpass Filter, 2.7 GHz	Micro-Tronics	HPM13194	N02687	CNR
Vector signal generator, 6 GHz	Agilent / HP	E4438C		06/09/12

COMPLIANCE CERTIFICATION SERVICES (UL CCS) FORM NO: CCSUP4031B
47173 BENICIA STREET, FREMONT, CA 94538, USA TEL: (510) 771-1000 FAX: (510) 661-0888

7. LIMITS AND RESULTS

7.1. RADIATED OUTPUT POWER

LIMITS

22.913(a) The ERP of mobile transmitters and auxiliary test transmitters must not exceed 7 Watts.

24.232(b) & RSS133 § 6.4 Mobile/portable stations are limited to 2 watts e.i.r.p. peak power and the equipment must employ means to limit the power to the minimum necessary for successful communications.

TEST PROCEDURE

ANSI / TIA / EIA 603 Clause 2.2.17

RESULTS

COMPLIANCE CERTIFICATION SERVICES (UL CCS) FORM NO: CCSUP4031B
47173 BENICIA STREET, FREMONT, CA 94538, USA TEL: (510) 771-1000 FAX: (510) 661-0888

CELL OUTPUT POWER (ERP)

High Frequency Substitution Measurement
Compliance Certification Services Chamber A

Company: KYOCERA
Project #: 11U14121
Date: 10/28/11
Test Engineer: MENGISTU MEKURIA
Configuration: EUT ALONE
Mode: TX, CELL BAND CDMA MODE

Test Equipment:
Receiving: Sunol T122, and Chamber A N-type Cable
Substitution: Dipole S/N: 00022117, 4ft SMA Cable (SN # 245182002) Warehouse.

f MHz	SG reading (dBm)	Ant. Pol. (H/V)	Cable Loss (dB)	Antenna Gain (dBd)	ERP (dBm)	Limit (dBm)	Margin (dB)	Notes
824.70	32.13	V	0.5	0.0	31.63	38.5	-6.8	
824.70	20.50	H	0.5	0.0	20.00	38.5	-18.4	
836.52	30.05	V	0.5	0.0	29.55	38.5	-8.9	
836.52	20.21	H	0.5	0.0	19.71	38.5	-18.7	
848.31	29.02	V	0.5	0.0	28.52	38.5	-9.9	
848.31	19.84	H	0.5	0.0	19.34	38.5	-19.1	

Rev. 3.17.11

COMPLIANCE CERTIFICATION SERVICES (UL CCS) FORM NO: CCSUP4031B
47173 BENICIA STREET, FREMONT, CA 94538, USA TEL: (510) 771-1000 FAX: (510) 661-0888

PCS OUTPUT POWER (EIRP)

High Frequency Fundamental Measurement
Compliance Certification Services Chamber A

Company: KYOCERA
Project #: 11U14121
Date: 10/28/11
Test Engineer: MENGISTU MEKURIA
Configuration: EUT ALONE
Mode: TX, PCS BAND CDMA MODE

Test Equipment:
Receiving: Horn T73, and Camber A SMA Cables
Substitution: Horn T60 Substitution, 4ft SMA Cable (SN # 245182002) Warehouse

f GHz	SG reading (dBm)	Ant. Pol. (H/V)	Cable Loss (dB)	Antenna Gain (dBi)	EIRP (dBm)	Limit (dBm)	Delta (dB)	Notes
1.851	9.4	V	0.85	8.01	16.56	33.0	-16.4	
1.851	18.1	H	0.85	8.01	25.26	33.0	-7.7	
1.880	8.6	V	0.85	8.13	15.85	33.0	-17.2	
1.880	18.7	H	0.85	8.13	25.94	33.0	-7.1	
1.909	9.2	V	0.85	8.13	16.45	33.0	-16.6	
1.909	18.7	H	0.85	8.13	25.98	33.0	-7.0	

Rev. 3.17.11

COMPLIANCE CERTIFICATION SERVICES (UL CCS) FORM NO: CCSUP4031B
47173 BENICIA STREET, FREMONT, CA 94538, USA TEL: (510) 771-1000 FAX: (510) 661-0888

7.2. FIELD STRENGTH OF SPURIOUS RADIATION

LIMIT

§22.917 (e) and §24.238 (a), RSS-132 § 4.5.1, & RSS-133 § 6.5.1 (a) (i) & (b): Out of band emissions. The power of any emission outside of the authorized operating frequency ranges must be attenuated below the transmitting power (P) by a factor of at least 43 + 10 log (P) dB.

TEST PROCEDURE

ANSI / TIA / EIA 603 Clause 3.2.12 & FCC 22.917 (b) & FCC 24.238 (b)(g)(1)(2)

RESULTS

COMPLIANCE CERTIFICATION SERVICES (UL CCS) FORM NO: CCSUP4031B
47173 BENICIA STREET, FREMONT, CA 94538, USA TEL: (510) 771-1000 FAX: (510) 661-0888

CELL SPURIOUS & HARMONIC (ERP)

Compliance Certification Services
Above 1GHz High Frequency Substitution Measurement

Company: KYOCERA
Project #: 11U14121
Date: 11/03/11
Test Engineer: MENGISTU MEKURIA
Configuration: EUT WITH HEADSET AND AC ADAPTER
Mode: TX, CELL BAND CDMA MODE

Chamber	Pre-amplifer	Filter	Limit
5m Chamber A	T144 8449B	Filter 1	Part 22

f GHz	SG reading (dBm)	Ant. Pol. (H/V)	Distance (m)	Preamp (dB)	Filter (dB)	EIRP (dBm)	Limit (dBm)	Delta (dB)	Notes
Low Ch, 824.70MHz									
1.649	-4.9	V	3.0	38.2	1.0	-42.1	-13.0	-29.1	
2.474	-21.1	V	3.0	37.5	1.0	-57.6	-13.0	-44.6	
3.299	-20.2	V	3.0	37.1	1.0	-56.3	-13.0	-43.3	
3.477	-17.0	V	3.0	37.0	1.0	-53.0	-13.0	-40.0	
1.649	0.2	H	3.0	38.2	1.0	-36.9	-13.0	-23.9	
2.474	-18.6	H	3.0	37.5	1.0	-55.1	-13.0	-42.1	
3.299	-16.7	H	3.0	37.1	1.0	-52.8	-13.0	-39.8	
3.477	-11.5	H	3.0	37.0	1.0	-47.5	-13.0	-34.5	
Mid Ch, 836.52MHz									
1.673	-5.6	V	3.0	38.1	1.0	-42.7	-13.0	-29.7	
2.510	-19.5	V	3.0	37.5	1.0	-55.9	-13.0	-42.9	
3.346	-20.2	V	3.0	37.1	1.0	-56.3	-13.0	-43.3	
3.526	-16.4	V	3.0	36.9	1.0	-52.3	-13.0	-39.3	
1.673	-0.9	H	3.0	38.1	1.0	-38.0	-13.0	-25.0	
2.510	-18.6	H	3.0	37.5	1.0	-55.0	-13.0	-42.0	
3.346	-17.5	H	3.0	37.1	1.0	-53.6	-13.0	-40.6	
3.526	-11.3	H	3.0	36.9	1.0	-47.2	-13.0	-34.2	
High Ch, 848.31MHz									
1.697	-7.5	V	3.0	38.1	1.0	-44.6	-13.0	-31.6	
2.545	-20.8	V	3.0	37.5	1.0	-57.3	-13.0	-44.3	
3.393	-18.9	V	3.0	37.1	1.0	-54.9	-13.0	-41.9	
3.572	-18.2	V	3.0	36.9	1.0	-54.1	-13.0	-41.1	
1.697	-1.4	H	3.0	38.1	1.0	-38.5	-13.0	-25.5	
2.545	-19.2	H	3.0	37.5	1.0	-55.6	-13.0	-42.6	
3.393	-17.8	H	3.0	37.1	1.0	-53.9	-13.0	-40.9	
3.572	-12.1	H	3.0	36.9	1.0	-48.0	-13.0	-35.0	

Rev. 03.03.09
Note: No other emissions were detected above the system noise floor.

PCS SPURIOUS & HARMONIC (EIRP)

Compliance Certification Services
Above 1GHz High Frequency Substitution Measurement

Company: KYOCERA
Project #: 11U14121
Date: 11/03/11
Test Engineer: MENGISTU MEKURIA
Configuration: EUT WITH HEADSET AND AC ADAPTER
Mode: TX, PCS BAND CDMA MODE

Chamber	Pre-amplifer	Filter	Limit
5m Chamber A	T144 8449B	Filter 1	Part 24

f GHz	SG reading (dBm)	Ant. Pol. (H/V)	Distance (m)	Preamp (dB)	Filter (dB)	EIRP (dBm)	Limit (dBm)	Delta (dB)	Notes
Low Ch, 1851.25MHz									
3.703	-10.3	V	3.0	36.8	1.0	-46.2	-13.0	-33.2	
5.554	-10.4	V	3.0	36.3	1.0	-45.7	-13.0	-32.7	
7.405	-12.2	V	3.0	36.6	1.0	-47.8	-13.0	-34.8	
3.864	-15.5	V	3.0	36.7	1.0	-51.2	-13.0	-38.2	
3.703	-18.0	H	3.0	36.8	1.0	-53.8	-13.0	-40.8	
5.554	-14.2	H	3.0	36.3	1.0	-49.5	-13.0	-36.5	
7.405	-11.3	H	3.0	36.6	1.0	-46.9	-13.0	-33.9	
3.864	-12.5	H	3.0	36.7	1.0	-48.2	-13.0	-35.2	
Mid Ch, 1880.00MHz									
3.760	-7.8	V	3.0	36.8	1.0	-43.6	-13.0	-30.6	
5.640	-8.1	V	3.0	36.3	1.0	-43.4	-13.0	-30.4	
7.520	-12.9	V	3.0	36.6	1.0	-48.5	-13.0	-35.5	
3.922	-15.5	V	3.0	36.6	1.0	-51.1	-13.0	-38.1	
3.760	-5.6	H	3.0	36.8	1.0	-41.4	-13.0	-28.4	
5.640	-7.5	H	3.0	36.3	1.0	-42.8	-13.0	-29.8	
7.520	-12.7	H	3.0	36.6	1.0	-48.3	-13.0	-35.3	
3.922	-12.8	H	3.0	36.6	1.0	-48.4	-13.0	-35.4	
High Ch, 1908.75MHz									
3.818	-7.7	V	3.0	36.7	1.0	-43.5	-13.0	-30.5	
5.726	-7.5	V	3.0	36.3	1.0	-42.8	-13.0	-29.8	
7.635	-12.5	V	3.0	36.6	1.0	-48.1	-13.0	-35.1	
3.981	-15.3	V	3.0	36.6	1.0	-50.9	-13.0	-37.9	
3.818	-5.8	H	3.0	36.7	1.0	-41.6	-13.0	-28.6	
5.726	-3.8	H	3.0	36.3	1.0	-39.1	-13.0	-26.1	
7.635	-13.5	H	3.0	36.6	1.0	-49.2	-13.0	-36.2	
3.981	-11.7	H	3.0	36.6	1.0	-47.3	-13.0	-34.3	

Rev. 03.03.09
Note: No other emissions were detected above the system noise floor.

8. SETUP PHOTOS

RADIATED RF MEASUREMENT SETUP FOR PORTABLE CONFIGURATION

X-AXIS PHOTO

Y-AXIS PHOTO

Z-AXIS WITH HEADSET PHOTO

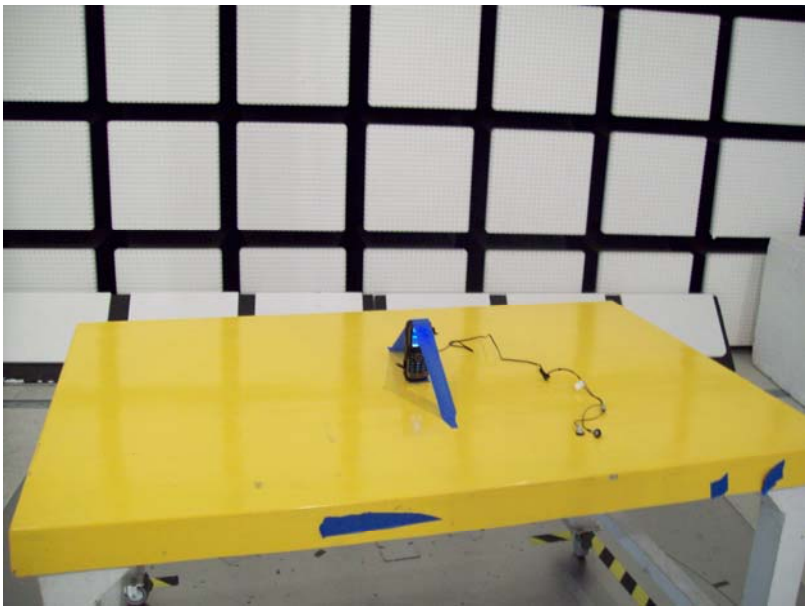

Y-AXIS WITH CHARGER PHOTO

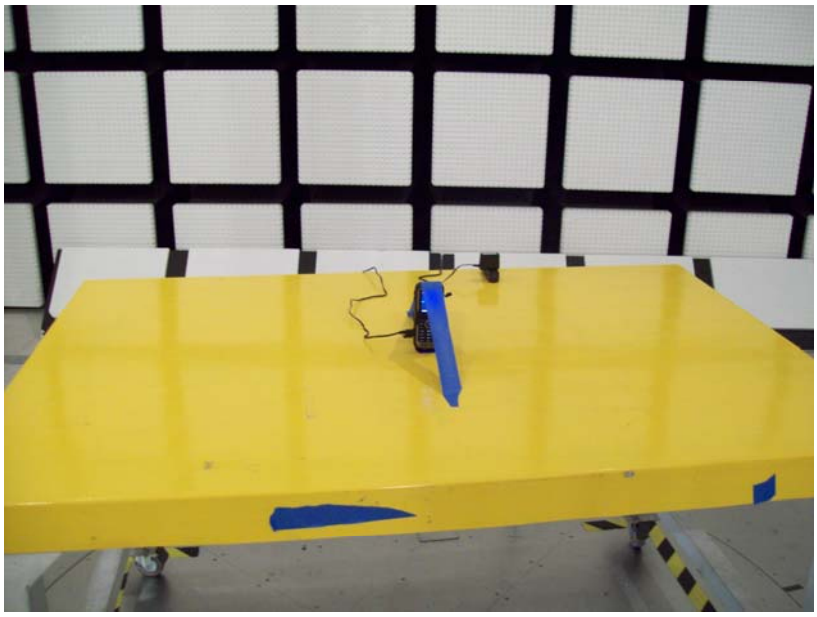

COMPLIANCE CERTIFICATION SERVICES (UL CCS) FORM NO: CCSUP4031B
47173 BENICIA STREET, FREMONT, CA 94538, USA TEL: (510) 771-1000 FAX: (510) 661-0888

Z-AXIS WITH HEADSET AND CHARGER PHOTO

END OF REPORT

COMPLIANCE CERTIFICATION SERVICES (UL CCS) FORM NO: CCSUP4031B
47173 BENICIA STREET, FREMONT, CA 94538, USA TEL: (510) 771-1000 FAX: (510) 661-0888